AMATEUR RADIO

JUNE 1962

Vol. 30, No. 6

2/-

Registered at G.P.O., Melbourne, for transmission by post as a periodical

"HAM" RADIO SUPPLIERS

(KEN MILLBOURN, PROP.)

5A MELVILLE STREET, HAWTHORN, VICTORIA

North Balwyn Tram Passes Corner. All parcels sent ordinary post unless otherwise stated. Phone 86-6465

Money Orders and Postal Notes payable North Hawthorn P.O. Packing Charge on all goods over 10 lbs. in weight, 5/- extra.

LSG11 SIGNAL GENERATOR

120 Kc.-390 Mc.

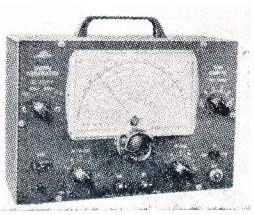

Freq. range (six bands): 120 Kc. to 130 Mc. on fundamentals; 120 to 390 Mc. on harmonics. Mod. freq. 400 and 1,000 c.p.s. Tubes: 12BH7, 6AR5. Rectifier: half wave selenium. Provision for crystal oscillator (xtal not supplied), 1 to 15 Mc. 100, 117 or 230v. a.c. input, 50/60 c.p.s. Size: 7½ x 10¾ x 4½ in. Weight: 6 lb.

Price £16/17/6 inc. tax.

No. 122 COMPONENTS

Headphone and Microphone Sets. Good condition .... **25/- set**

Aerial Pack, complete with 30 ft. mast (ten 3 ft. lengths of ¾" diam.), ropes, pegs .... **50/- to clear**

PLUGS AND SOCKETS

Small bakelite speaker 4-pin Plug and Socket .... **1/9 pair**

Jones' small 6-pin Plug and Socket .... **7/6 pair**

FUSE HOLDERS

Bakelite, round type, takes standard auto fuse 3/6

Slide lock, single 3/6

Slide lock, twin 4/6

SCR522 TRANSCEIVERS

Clean condition. Complete with valves. 5/- handling charge **£5**

Modified Units, complete with 832s. Few only left at **£7½**

Receivers only, incomplete, but ideal for wrecking. To clear **19/6**

NEW TAPE DECKS

"Collaro" Studio Type, Model BM-2. Three Speed.

Collaro "Studio" Stereo Tape Decks.

Prices on Application.

VARIABLE CONDENSERS

(Ceramic)

Trimmers, Ducon, 4-30 pF., **3/6 ea.**

Philips air trimmers, 3-30 pF., **3/- ea.**

Compression trimmers, c.t. 3-55, **1/- ea.**

50 and 55 pF. screwdriver adjustment, chassis mounting .... **12/6 each**

TECH MULTIMETER

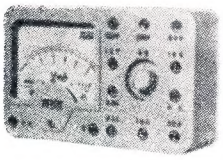

300 μA. movement.
AC and DC voltages: 0-10, 0-50, 0-250, 0-500, 0-1000v.
Current ranges (mA.) 0-1, 0-100, 0-500 mA.
Ohms range: 0-100,000 ohms.
Size: 3¾ x 2½ x 1¼ inches.
Complete with leads.

Price only £2/17/6, post paid.

NEW VALVES

1A3	2/6	10 a	£1
1A5	5/-	5 a	£1
1A7GT	7/6	3 a	£1
1C7	3/-	7 a	£1
1D5GT	5/-	5 a	£1
1D8	7/6	3 a	£1
1F5	7/6	3 a	£1
1H4	5/-	5 a	£1
1H5	5/-	5 a	£1
1H6	5/-	5 a	£1
1K4	5/-	5 a	£1
1K5	5/-	5 a	£1
1K7	5/-	5 a	£1
1L4	5/-	5 a	£1
1L5	10/-		
1M5G	5/-	5 a	£1
1N5	5/-	5 a	£1
1P5	2/-	10 a	£1
1Q5	5/-	5 a	£1
1S4	7/6	3 a	£1
1S5	10/-		
1T4	5/-		
2A5	7/6		
2A6	7/6		
2D21	15/-		
2X2	5/-	5 a	£1
3A4	10/-		
3AP1	25/-		
3BP1	35/-		
3Q5	5/-	5 a	£1
3Q4	10/-		
5V4G	15/-		
5Y3GT	13/9		
5Z3	17/6		
6A3	7/6	3 a	£1
6A6	7/6		
6AG5	5/-		
6AG7	12/6		
6AJ5	7/6	3 a	£1
6AK5	20/-		
6AM5 (EL91)	10/-		
6AM6 (EF91)	10/-		
6B4	10/-		
6B7	10/-		
6BE6	12/6		
6C4	5/-	5 a	£1
6C5	5/-	5 a	£1
6C6	5/-	5 a	£1
6C8	10/-		
6D6	5/-	5 a	£1
6E5	5/-	5 a	£1
6F5	7/6		
6F6	12/6		
6F7	10/-		
6F8	5/-		
6G6	7/6	3 a	£1
6G8G	17/6		
6H6 Glass	2/6		
6H6 Metal	3/6		
6J6	10/-		
6J8	20/-		
6K7	5/-	5 a	£1
6K8G	20/-		
6K8GT	12/6		
6L7	5/-	5 a	£1
6R7	7/6	3 a	£1
6SA7	7/6		
6SC7	7/6		
6SF5	7/6	3 a	£1
6SF7	7/6	3 a	£1
6SH7	4/-	5 a	£1
6SJ7	12/6		
6SK7GT	12/6		
6SL7GT	12/6		
6SQ7	12/6		
6SS7	7/6	3 a	£1
6T7	7/6	3 a	£1
6V4	11/4		
6V6GT	16/-		
6X5	15/-		
6Y6	5/-	5 a	£1
6Z7	7/6	3 a	£1
7A4	5/-	5 a	£1
7A8	2/-	11 a	£1
7C5	5/-	5 a	£1
7C7	2/-	12 a	£1
7E6	3/6	7 a	£1
7W7	2/6	10 a	£1
12A6	4/-	6 a	£1
12AT7	7/6		
12SA7GT	10/-		
12AH7	5/-	5 a	£1
12C8	5/-		
12H6	3/6		
12J5	5/-	5 a	£1
12K8	5/-	5 a	£1
12SK7	5/-	5 a	£1
12SQ7	5/-		
12SR7	5/-	5 a	£1
14A7	3/6	7 a	£1
117Z6	5/-	5 a	£1
1625	5/-	5 a	£1
1626	5/-	5 a	£1
1629	5/-	5 a	£1
30	1/3		
35T	30/-		
45	5/-		
717A	7/6	3 a	£1
726A	10/-		
80	10/-		
805	45/-		
807	7/6	3 a	£1
808	10/-		
809	20/-		
815	15/-		
830B	15/-		
832A	19/6		
866	32/6		
954	5/-	5 a	£1
955	5/-	5 a	£1
956	5/-	5 a	£1
958A	2/6	10 a	£1
2051	5/-		
9003	7/6	3 a	£1
AV11	2/11		
DL75	2/6	10 a	£1
EA50	2/-	10 a	£1
EC91/6AQ4	10/-		
EF36	5/-	5 a	£1
EF39	5/-	5 a	£1
EF70	5/-	5 a	£1
EF72	5/-	5 a	£1
EF73	5/-	5 a	£1
EL41	10/-		
EY91	5/-		
OB2	30/-		

BC433-G COMPASS RECEIVERS

Freq. range 200 Kc. to 1750 Kc., 14 valves—6.3 volt series, 6K7, 6J5, etc. I.F. freq. 142.5 Kc. Clean condition, Priced only **£10/0/0**

Flexible cable & control box **30/-** extra.

JAPANESE METERS

0-1 mA. square, 1½" hole, MR-2P **35/-**

0-1 mA., 2¼" square, MR-52 .... **£2**

0-1 mA., 3¼" round, MR-65 .. **£1/15/0**

CRYSTAL MICROPHONES

Price only 57/6

Stand to suit 15/- extra.

Model BM3 (illustrated): Response 100-8,000 c's., fitted with 6 ft. cable and phone plug with on-off switch. Can be used on stand for hand use.

BM3 Insert .... **10/- each**

Model LM4, small lapel clip, sensitvity —57 db., response 100-6,000 c.p.s. .. **17/6**

1155 GENEMOTORS TYPE 34A

Input 9.3v., output 225v. at 110 mA. Complete with relays and filters, in case. Weight 30 lbs. **19/6 each.** 5/- handling charge.

AMERICAN POTENTIOMETERS

American Bradley, 2" long, ¼" shaft, 1" diam. Available in following sizes: 20,000, 25,000, 30,000, 50,000, 100,000, 250,000 ohms, 1 and 2 megohms.

Price 2/6 each

OA79 and OA81 DIODES

Well known make. Brand New.

To Clear—2/6 each

SCOPE SOLDERING IRON TIPS

Instrument and wedge type tips, **1/- ea.** or 5/6 packet of 6. Carbon elements, **1/- ea.**, or 5/6 packet of 6.

R1155B COMMUN. RECEIVER

Frequency range 75 Kc. to 18 Mc. New condition. Few only, **£25.**

FILAMENT TRANSFORMER

240v. primary, secondary: 5v. at 2 amp. and 10v. at 3 amp. **35/-.**

TRANSISTOR POWER SUPPLIES

A. & R. Types PS21 and PS25. Prices on Application.

VALVES—NEW & USED (Continued)

QQV06/40	97/6		
RL18	7/6	3 a	£1
TT15 (CV415)	5/-		
UL41	7/6	3 a	£1
VR53	5/-	5 a	£1
VR101	5/-	5 a	£1
VR102	5/-	5 a	£1
VR103	5/-	5 a	£1
VR136	2/-	12 a	£1
VR150	10/-		
VT52	5/-		
VT127	4/11	5 a	£1
VT501	7/6	3 a	£1
Y65	5/-		

"AMATEUR RADIO"

JOURNAL OF THE WIRELESS INSTITUTE OF AUSTRALIA. FOUNDED 1910.

JUNE 1962
Vol. 30, No. 6

Editor:
K. M. COCKING VK3ZFQ

Publications Committee:
G. W. Baty (Secretary) VK3AOM
S. T. Clark VK3ASC
R. S. Fisher VK3OM
R. W. Higginbotham VK3RN
E. C. Manifold VK3EM

Advertising Enquiries:
C/o. P.O. Box 36, East Melbourne, C.2, Vic.
OR
Mrs. BELLAIRS, Phone 41-3535. 478 Victoria Parade, East Melbourne, C.2, Victoria. Hours 10 a.m. to 3 p.m. only.

Publishers:
VICTORIAN DIVISION W.I.A.,
Reg. Office: 62a Franklin St., Melbourne, Vic.

Printers:
"RICHMOND CHRONICLE," Phone 42-2419. Shakespeare Street, Richmond, E.1, Vic.

★

All Correspondence should be forwarded to:—
THE EDITOR,
"AMATEUR RADIO,"
P.O. BOX 36,
EAST MELBOURNE, C.2, VIC.
before the 8th of the month preceding publication. Technical articles should preferably be typed, double spaced, on one side of the paper, signed and numbered. All drawings should be large and done in Indian ink.

★

Issued monthly on first of month. Subscription rate in Australia and Overseas is 24/- a year, in advance (post paid).

Back copies may be available; enquiries to P.O. Box 36, East Melbourne, C.2, Vic.

Any complaint regarding non delivery of "A.R." and change of address should be made to the Secretary of the member's Division and not to "A.R." direct.

★

WI Broadcasts:

VK2WI: Sundays, 1100 hours EST, simultaneously on 3573 Kc., 7146 Kc., 50.16 Mc. and 145.13 Mc.; Intrastate call-backs taken on 7050 Kc. VHF 1930 hours EST on 50.16 Mc. and 145.13 Mc.; call-backs taken on 2 metres.

VK3WI: Sundays, 1030 hours EST, simultaneously on 3573 and 7146 Kc., 51.016 and 146.25 Mc. Intrastate hook-ups taken on 7135 Kc.

VK4WI: Sundays, 0900 hours EST, simultaneously on 7146 Kc. and 14.342 Mc. Intrastate hook-ups taken on 7105 Kc.

VK5WI: Sundays, 0900 SAT, on 7146 Kc. Relays on 3.7, 14.2, 50.02, 144 and 288 Mc. Intrastate hook-ups taken on 7125 Kc.

VK6WI: Sundays at 0930 hours WAST, on 7146 Kc. Intrastate hook-ups taken on 7085 Kc.

VK7WI: Sundays at 1000 hours EST, on 7146 Kc. and 3672 Kc. Intrastate hook-ups taken on 7115 Kc.

★

OUR COVER

At the Federal Convention in Perth, much work had to be done by the delegates. Our cover shows the meeting in action. Fuller details are given on page 11.

FEDERAL COMMENT

★

AMATEUR FREQUENCY ALLOCATIONS

Another significant chapter in the history of Amateur Radio has closed with the official notification by the P.M.G. Department of the new frequency table which becomes effective from and inclusive of July 1, 1962. It seems almost incredible that three years have elapsed in reaching this finality, years in which the Institute has "grown up" in stature and experience to become a forceful factor at the conference table of the R.F.A.R.C.

The following is the official statement of the authorised frequency bands and types of emission available for use by Amateur Radio station licensees as from 1st July, 1962:—

Medium Frequency Band (Kc/s.):
1800-1860.(1)

High Frequency Bands (Mc/s.):
3.50-3.70, 7.00-7.10, 7.10-7.15,(1) 14.00-14.35, 21.00-21.45, 26.96-27.23,(5) 28.00-29.70.

Very High Frequency Bands (Mc/s.):
52-54, 144-148, 288-296.(2)

Ultra High Frequency Bands (Mc/s.):
420-450,(1, 3) 576-585,(4) 1,215-1,300,(1) 2,300-2,450.(1)

Super High Frequency Bands (Mc/s.):
3,300-3,500,(1) 5,650-5850,(1) 10,000-10,500,(1) 21,000-22,000.

Notes (1) The Amateur Service is the Secondary Service in this band.
(2) This band is not available for the Amateur Service after 1st July, 1963.
(3) This band is available for the Amateur Service as from 1st January, 1964.
(4) This band allocated on a temporary basis until required by the Broadcasting Service.
(5) This band is designated for Industrial, Scientific and Medical purposes. Radio communication services operating within the band must accept any harmful interference that may be experienced from the operation of industrial, scientific or medical equipment.

Types of Emission Authorised—

All bands	A1, A3, A3a, A3b, and F3 (±3 Kc/s.).
All bands above 52 Mc/s.	A2, F2, F3.
All bands above 144 Mc/s. ..	A0, F0, P0.
Ultra High and Super High Frequency Bands, and 288-296 Mc/s. until 1/7/63	A5, P1, P2d, P2e, P2f, P3d, P3e, P3f.

The P.M.G. Department intends to replace all existing Amateur Station Licences with new documents which will incorporate the information already stated. These will be issued prior to July 1, 1962.

The changes are not all frequency-wise. Federal Council believes it has achieved two points vital to the future of Amateur Radio in this country—the acceptance of our representative at further conferences and the status accorded in our new designation, namely "The Amateur Service".

FEDERAL EXECUTIVE, W.I.A.

CONTENTS

Station Test Equipment: The Modmeter 3
A Like-New Mixer Circuit 4
A G.G. Linear Amplifier 7
Some Notes on Bandpass Crystal Filters 8
A Transistorised Converter for 144 Mc. 9
Technical Correspondence: Errata—"For 288 Mc. Enthusiasts" 15
Hints and Kinks: Dial to Read 0-360° 9
26th Federal Convention at Perth, 1962 11
W.I.A. Federal President's Annual Report, 1961-62 12
W.I.A. Queensland Division Convention 16
13th North Coast and Tablelands (VK2) Convention 16
W.I.A. D.X.C.C. 15
W.I.A. 50 Mc. W.A.S. 19
Federal and Divisional Monthly News Reports 23
Correspondence 22
DX 17
Sideband 21
SWL 19
VHF 20

GERMANIUM POWER TRANSISTORS

are best selected from this chart

— then you should contact the MULLARD technical information service, who will give you all the data you need to confirm your choice.

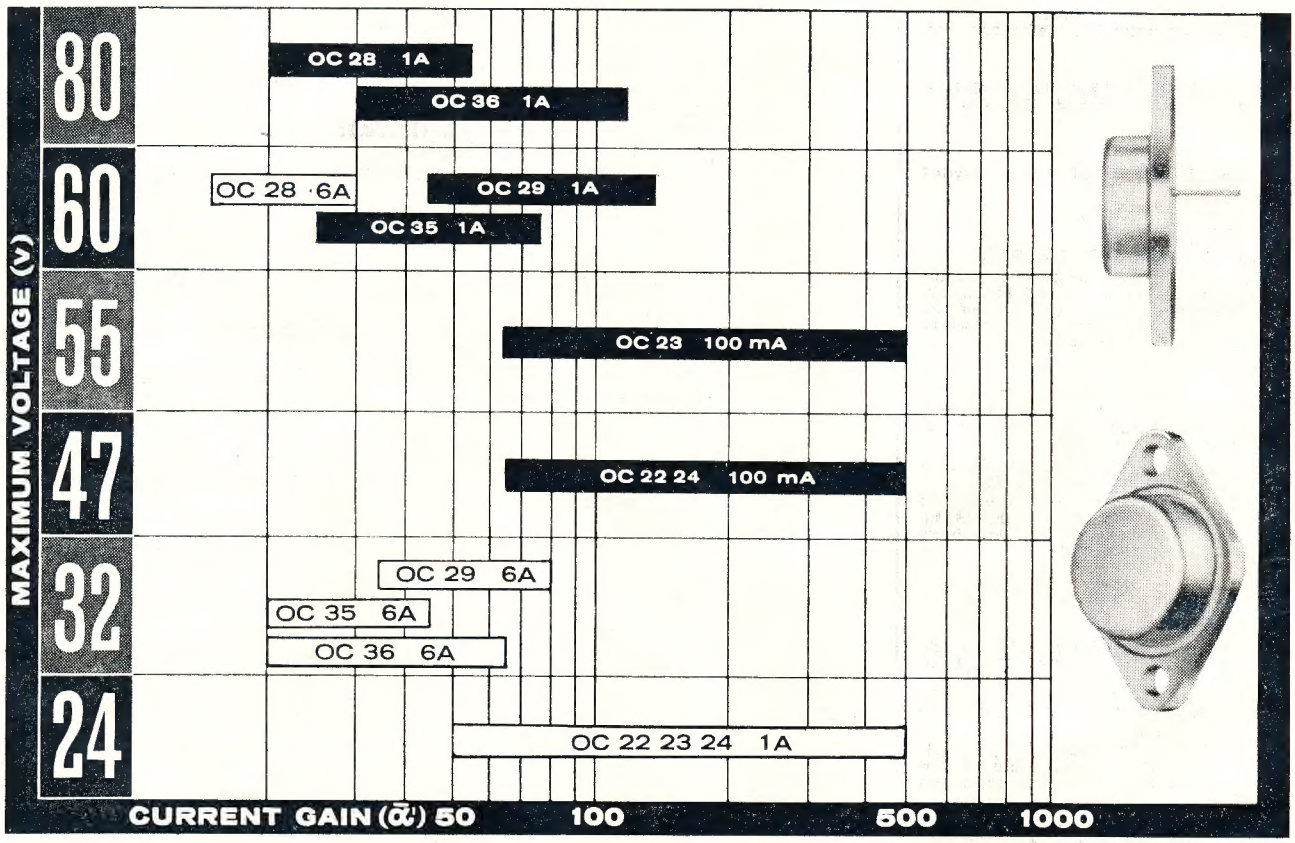

GREY is maximum allowable collector-emitter voltage at maximum continuous current.

BLACK is maximum allowable collector-base voltage Vcb max. (Ie = 0).

Here is a guide to recommended applications:

- ★ **OC22** for high quality industrial audio
- ★ **OC23** for ferrite memory core drive
- ★ **OC24** for r.f. power applications
- ★ **OC28** for d.c. converters (24V version)
- ★ **OC29** for extra high gain
- ★ **OC35** for general purpose, low cost application
- ★ **OC36** for general purpose, high power audio and d.c. converters (12V version)

Mullard

semiconductors for industry

MULLARD AUSTRALIA PTY. LTD., 35-43 CLARENCE STREET, SYDNEY, 29 2006 AND 123-129 VICTORIA PARADE, COLLINGWOOD, N.5. VICTORIA 41 6644
ASSOCIATED WITH MULLARD LIMITED LONDON

MT115A

STATION TEST EQUIPMENT:

THE MODMETER

G. C. JENKINS,* VK4QJ

• A simple device which can easily be made by the Amateur and which, if correctly used, will enable maximum electrical performance from a transmitter. In addition, it functions on receive!

FOR the past four years a "Modmeter" has been part and parcel of the gear at this station, and it has proved to be practically indispensable. This was borne out when, due to a failure in the power supply, the "Modmeter" was not in use when a new rig was put through its paces; but more of that later.

The "Modmeter," as the name implies, is a cathode ray tube with associated circuitry used for monitoring purposes; it functions both on transmit and receive.

Reference to Fig. 1 will show that the circuitry is not involved, few parts are used, and, other than the placement of the power transformers, no particular skill is required as the construction is not critical. It may be built by any Amateur who can use a soldering iron.

Basically, the circuit comprises an i.f. amplifier (V1), a c.r. tube with associated voltage divider network, and an audio output monitor (V2).

Valve types are not critical. I used a 6AC7 for V1, but any suitable r.f. pentode may be used here providing that all electrodes are fed with the correct voltages; similar remarks apply to V2 and V3. Any c.r. tube may be used, and if the Amateur already possesses a c.r.o. with separate connections available to the deflection plates, then V1, V2 and V3 may be built as an outboard unit and connected to the station c.r.o. If another c.r. tube is used, it will be necessary to arrange for the correct voltages to be fed to all electrodes and thus the circuit (dotted in Fig. 1) will require amendment.

FUNCTIONS

Valve V1 is used as an i.f. amplifier, being coupled to the receiver by a length of co-ax cable. In my case, I have it connected to the receiver detector diode in series with a 3-30 pF. Philips trimmer. Transformer T1 is an i.f. transformer to suit the i.f. used in the receiver (in my case 85 kc.—but any frequency can be used). Valve V2 is connected as an infinite impedance detector, and the rectified audio is applied to one of the horizontal deflection plates of the c.r. tube (an ACR10) when the unit is in the trapezoidal position (T). Audio output is also available from V2 via the audio output jack, but this connection is not recommended, as the shunting effect of the headphones reduces the screen pattern size, when switched to the T position. It was for this reason that V3 is provided, connected as a cathode follower, and potentiometer R14 makes an ideal audio level control output via J3.

The switching provided by S1b and S1c quite effectively prevents any interaction or variation of loading on the c.r. tube horizontal plate, when going from T to W (waveform) positions. When S1a is placed in the W position, a.c. is fed from the power transformer via R10 and R11 (be careful, these are "hot"!).

The power supply is conventional, although now I am using silicon diodes to replace the vacuum tubes. In addition, experiments are being made with another time base oscillator and amplifier, which will use a third position on SW1 to permit a more accurate analysis of distortion in the transmitted signal, but that may be the subject of a future article.

Potentiometer R4 is a manual gain control for use when on receive, none being necessary when on transmit, as detuning the 100 pF. condenser in the 7193 grid will suffice.

On transmit, I use an external outside aerial, which offers certain advantages. This aerial is connected to L2, which is coupled to L1. The latter winding, L1, is tuned to resonance in the required band. In my case, a 100 pF. variable was used, though any suitable value would suit. As is the case when on receive, the r.f. signal is applied to the grid of V2 in addition to the vertical plate of the c.r. tube (pin 7 on the ACR10) and the rectified audio (or a.c.) is used as formerly.

If your receiver is muted on transmit (as is mine), no switching from transmit to receive is required, it being done automatically.

As already stated, construction is not critical regarding layout, but if the power supply is on a separate chassis, it does overcome the problems of magnetic fields affecting the c.r. tube trace. If you desire to use the same chassis, place the p.t. at the back of the c.r.t. and place a metal shield between the p.t. and c.r.t.

SETTING-UP FOR RECEPTION

A 3-30 pF. trimmer is connected to the receiver second detector diode and to a length of co-ax cable (RG59U) terminating in a suitable connector on the "Modmeter" chassis (J1).

Tune the receiver to a point where **no** signal is being received, place S1 in the W position, and set the 3-30 pF. trimmer in the receiver to maximum capacity. Adjust the i.f.t. in the "Modmeter" so that the maximum amount of noise shows on the c.r.t. screen, then adjust the 10K pot in the 6AC7 (V1)

(Continued on Page 15)

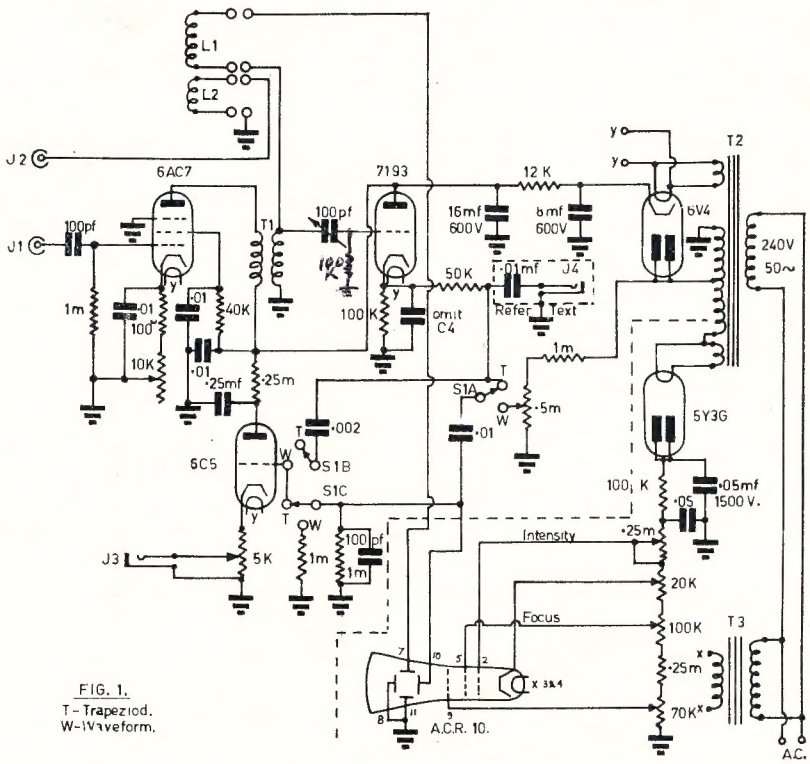

FIG. 1.
T - Trapeziod.
W - Waveform.

A 100K resistor should go from the grid of the 7193 to earth. This has been omitted from the circuit diagram. The h.t. supply for the valves should be 200-250 volts, and to suit the c.r.o. A 325 or 385 volt power transformer would do.

* 86 Miscamble Street, Roma, Qld.

A LIKE-NEW MIXER CIRCUIT*

WOULD you like to improve the sensitivity and the stability of your receiver? If you would, and don't mind delving underneath the chassis a bit, one of the quickest routes is to modify front-end circuitry.

Here's one which has escaped almost everyone's attention since it was first developed. That's why we're calling it a "like-new" circuit; it's been around for a spell but it might as well be new since almost no one knows of its existence.

Before going into this circuit, it might be well to review the characteristics of a good mixer. The ideal mixer in a superhet receiver should (1) produce no spurious frequencies, (2) provide ample gain for the signal, (3) contribute no noise to the signal, (4) provide complete isolation between the oscillator and signal to prevent undesired radiation, and (5) present as light a load as possible to the oscillator to preserve frequency stability.

These characteristics, at least to a degree, are mutually incompatible with most conventional circuits. For instance, isolation of the oscillator from the signal circuit usually requires screening grids in the mixer tube, which in turn raise the mixer noise level and violate objective 3.

The best compromise to date has been the 6AC7 used as a pentode mixer, following the circuit described in Langford-Smith[1]. This circuit provided low noise, adequate gain, little in the way of spurious output, and adequate isolation for most purposes.

However, the particular version of the twin-triode cathode-coupled mixer which we're describing here outdoes the 6AC7 on all counts except gain, and runs it a close race there. On top of this, it can be installed in any set which uses an octal-base. a 9-pin, or a 7-pin mixer tube without changing the socket, since suitable twin triodes are available in all three basings.

The circuit is not original; it was found in K. A. Pullen's book "Conductance Design of Active Circuits," a volume[2] which incidentally should be in the library of every serious Ham designer, and was field-tested in a vintage BC-779 in comparison with both a 6L7 and a 6AC7.

Results were judged on a purely subjective basis, due to lack of test instruments suitable for adequate and accurate measurements. Numerical values mentioned here are calculated figures, but the field tests confirm them as closely as possible.

The full circuit is shown in the schematic, Fig. 1. Table 1 lists parts values and operating conditions which vary with different tube types or design objectives.

At first glance, you may be led to believe that this is approximately the same circuit as that recommended by Geisler[3] or Lee[4], or may be a version of the Crosby triple-diode product detector[5]. While the general configuration is similar, the circuit operation and its advantages are radically different.

The key point is the low value of plate voltage supplied to V1B. Pullen recommends only that V1B's plate supply be "considerably" lower than that for V1A. The best operation was found with 50- and 150-volt supplies, respectively, and component values shown are for use with these voltages.

By operating the two nominally-identical triode sections with a common cathode resistor but at two different plate-supply voltages, a relatively small change in current in one tube will cause a large change in the gain of the other. This is accomplished without sacrificing average gain in either tube.

In addition, the cathode-follower action of each stage completely isolates the oscillator from the signal circuit. Since the signal sees only a pair of triodes, noise is not increased.

This circuit is a true linear mixer rather than a detector; its output contains only the two original frequencies and the "product" of the original signals (numerically equal to the sum and difference frequencies but without their usual noise content). The chain of spurious frequencies usually found in detection-type mixer circuits is absent.

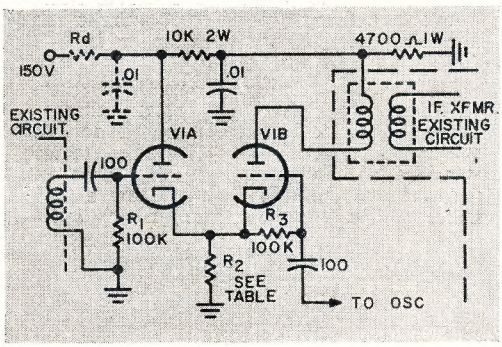

Those who have tried triode mixers before, even of the cathode-coupled variety, may wonder about gain. Calculations showed that the version gain of about 20, as compared to the calculated pentagrid mixer gain of about 5 under the same conditions.

The test signal was a broadcast station with consistent strength. S meter reading with the pentagrid mixer was recorded and the twin-triode circuit then substituted and mixer alignment readjusted. The S meter showed just under 2 units improvement.

Considering the free-wheeling calibration of most S meters, and this one was no exception, this is a remarkable correlation of theory and experiment. Frankly, we disbelieved it and substituted another tube which had a calculated gain of 13. After re-alignment, the S meter dropped one unit.

Regardless of such gain figures, which are dependent on many variables, not all of which are under control, this version of the twin-triode mixer shows more signal gain than many pentagrid mixers. Its noise figure is so low that mixer noise simply disappears, even with three i.f. stages following. The result is almost complete silence between stations, leading one to believe at first that the circuit is a dud. Then, though, a fading long-hop signal will come through, moving almost instantly out of the no-signal region into clear audibility, and the design is vindicated.

SELECTION OF TUBE TYPE

Every type of twin-triode tube tested to date works in this circuit, but some give better results than others. As noted in Table 1, oscillator injection voltage requirements vary drastically from tube to tube. In a like manner, sensitivity varies.

Among octal-base tubes, the 6SN7 gives greatest gain but requires higher voltages to get there. The 6SL7 develops its gain (just half an S unit less) with much weaker signals and much less oscillator injection. Therefore, the 6SL7 is recommended.

Dozens of twin triodes are available on 9-pin bases; among the most popular are the 12AX7, the 12AU7, and the 12AT7.

The 12AX7 is directly comparable with the 6SL7, and the 12AU7 with the 6SN7. However, the 12AT7 is the hottest tube available for this circuit, with a gain of more than 100 and comparatively low injection and signal voltage requirements, so it's the only recommended type. If you're willing to change sockets, the 12AT7 is the best for any set regardless of original tube type.

In the 7-pin basing, there's only one choice—the 6J6. Aside from the fact that the 6J6 is the only 7-pin twin triode easily available, it is surpassed only by the 12AT7. Gain is in the neighborhood of 100 (see Table 1).

SIMPLE TO INSTALL

The entire circuit is simplicity itself to install. Remove all old connections from the mixer-tube socket, being careful not to cut short either the grid lead from the tuning coil or the plate lead from the i.f. can. Then rewire according to the schematic.

If you don't have +150v. d.c. available in your receiver (many don't), install resistor Rd and its by-pass capacitor shown on the schematic in dotted lines. Value of Rd must be determined by trial and error. Start with 50K ohms, and work down until you find the resistor which gives 150 volts at point A after everything has warmed up.

With the new mixer installed, you'll have to re-align the mixer tuned circuits. The cathode-follower inputs reduce input capacity so drastically as to completely detune the stage, so don't be surprised if nothing comes through at first.

The input capacity change has least effect at the low end of any band, so it's best to reverse normal alignment procedure and start by adjusting the **trimmer capacitors** in the tuning assembly at the **low end.** Simply adjust for maximum signal strength (or higher S meter reading).

Next, tune to the high end of the band and rock the trimmer slightly to see if the adjustment is optimum. If

* Reprinted from "73" Magazine, October 1961.

Tube	6SN7 (also 12AU7)			6SL7 (also 12AX7)			12AT7			6J6	
Value of R2	100	500	1000	100	500	1000	100	500	1000	100	1000
Input—Voltage (Signal)	2.1	10.5	21	0.32	1.6	3.2	1.4	7.0	14.0	2.1	21
Input—Voltage (Oscillator)	2.5	11.5	22.4	0.42	1.9	3.6	1.6	7.0	13.1	2.3	22
Conversion—Gain if i.f. transformer impedance is 50K ohms (for comparison)	18.5	18.3	18.0	13.9	13.7	13.6	100	150	160	80	130

Table 1.—Voltage Requirements for Various Tubes and Value of R2 with Typical Conversion Gain.

not, adjust the trimmer again for the best high-end signal strength.

If the high end required adjustment, return to the low end but this time adjust the coil slug for maximum signal. Then return to the high end and re-adjust the trimmer. You may have to repeat this slug-at-low-end and trimmer-at-high-end procedure several times to restore tracking, since the change in input capacity usually amounts to about 10 pF., which upsets original tracking adjustments. However, with patience the tracking can be made to surpass the original condition.

THEORY OF OPERATION

For the theory-minded, here's how this mixer operates:

First, imagine that the second half of the tube, V1B, is not in the circuit at all. Signal voltage supplied to the grid of V1A varies the tube's plate current, and this variation of current through cathode resistor R2 varies the instantaneous voltage from the cathode end of R2 to ground.

Now add V1B to the circuit, but keep the oscillator turned off. The circuit is now a cathode-coupled amplifier. Since it is biased to operate in a linear region, the only output frequency is the signal frequency, which is by-passed to ground through the i.f. transformer. Output is nil.

Remove the signal voltage from V1A, apply the oscillator voltage to V1B, and the situation is reversed. Now V1B is the cathode follower and V1A the grounded-grid amplifier (with no load in the plate circuit). Output is still zero.

With both signal and oscillator voltages applied, the situation changes. V1B is a grounded-grid amplifier for the signal, but its bias is being changed also by the oscillator signal and as a result its gain varies from zero (at cut-off) to maximum (zero bias) at the oscillator frequency.

Thus, at the instant when signal voltage is high and oscillator voltage is low, V1B will have maximum gain and output will be high. If oscillator voltage is high at that instant, output will be low because V1B's gain will be zero.

This can be expressed mathematically too: The gain of two cascaded amplifiers is equal to the product of their individual gains. That is, $K_{total} = K_1 \times K_2$. In this circuit, K_1 is equal to the gain of V1A and K_2 is equal to the gain of V1B.

However, gain is equal to the product of the tube's mutual conductance and the effective load resistance, and the mutual conductance of a tube is determined in part by its grid bias. If this bias is changing at a rapid rate, as it is in this circuit, the gain will be equal to average gain times the rate at which bias changes, or $K_2 = K_{2au} \times F_{osc}$.

Plugging this equation back into the original total gain equation, gives us $K_{total} = K_1 \times K_{2au} \times F_{osc}$.

Since the output signal is, by definition, equal to the input signal times the total gain, we have for an input signal F_{stg} an output of $K_1 \times K_{2au} \times F_{osc} \times F_{stg}$, and since a.c. signals are vector rather than scalar quantities the indicated multiplication must be carried out by vector rather than by straight arithmetic methods. The result is that the output consists of the original two frequencies, the numerical sum of the original frequencies, the numerical differences, and nothing more.

Getting away from the exotic mathematics, the big difference between this process and detection-type mixing using non-linear devices such as diodes or overdriven tubes is that **only** four output frequencies are present. Harmonics and spurious outputs are not.

In addition, the cathode follower is far more tolerant of overload than is any other basic amplifier circuit, and as a result no clipping or distortion occurs in the mixer.

A common problem with many conventional mixers is cross-modulation, in which two carriers become "intertwined" and an unwanted signal rides in on the one you want.

Even under extreme conditions, such as local injection of a signal strong enough to almost block the i.f. strip, cross-modulation could not be induced in this mixer. Apparently this is another by-product of its unusual method of operation.

Although no tests have yet been made, Pullen's analysis of the circuit indicates that it should provide a good high-output product detector for converting s.s.b. and c.w. to audible signals; simple substitution of an RC coupling network (or an audio transformer) for the i.f. transformer is the only circuit change, though you might want to increase the value of resistor R2.

In summary, this overlooked mixer circuit appears to offer extreme advantages over more-conventional circuits in all of the five characteristics of the ideal mixer, with fewer parts than usually required. It works as well in the set as it does "on paper" in the design stage, and can easily be adapted to any receiver. Try it, and let us know how it works for you.

REFERENCES

1. Langford-Smith, F., Radiotron Designer's Handbook, Fourth Edition, Radio Corporation of America, Harrison, N.J., 1953, pages 938 and 967.
2. Pullen, K. A., Conductance Design of Active Circuits, John F. Rider Publisher, Inc., New York, 1959.
3. Geisler, Leonard, "Souping The Super-Pro," "CQ" Magazine, December 1957, page 30.
4. Lee, Cmdr. Paul, "Save Your Super-Pro For S.S.B.," "CQ" Magazine, September 1958, page 52.
5. "73" Staff, "Beat Generation," "73" Magazine, February 1961, page 28.

Uncited by number. "73" Staff, "Up Front," "73" Magazine, March 1961, page 32.

DURALUMIN, ALUMINIUM ALLOY TUBING

IDEAL FOR BEAM AERIALS AND T.V.

★ LIGHT ★ STRONG ★ NON-CORROSIVE

STOCKS NOW AVAILABLE FOR IMMEDIATE DELIVERY

ALL DIAMETERS—¼" TO 3"

Price List on Request

STOCKISTS OF SHEETS—ALL SIZES AND GAUGES

GUNNERSEN ALLEN METALS PTY. LTD.

SALMON STREET,
PORT MELBOURNE, VIC.
Phone: 64-3351 (10 lines)
Telegrams: "Metals," Melb.

ADELAIDE GAM MELBOURNE

HANSON ROAD,
WINGFIELD, S.A.
Phone: 45-6021 (4 lines)
Telegrams: "Metals," Adel.

PRICES REDUCED!

WARBURTON FRANKI announces REDUCED PRICES on basic TEST EQUIPMENT

Increased demand for Heathkit quality has made these substantial price reductions possible! Now more than ever Heathkits lead the field for sheer value for money—with unmatched engineering, handsome design and highest quality components! Contact Warburton Franki now for full technical details, catalogues, easy-purchase terms!

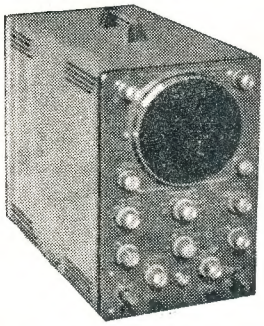

HEATHKIT O-12E "EXTRA DUTY" 5" OSCILLOSCOPE KIT

WAS £94-8-0

NOW £65-0-0

The unique Heath patented sweep circuit in this unusual scope offers five times the normal sweep found in other scopes. Positive trace position controls prevent bounce or overshoot. Size: $14\frac{1}{8}$" x $8\frac{5}{8}$" x 16". Weight: 22 lb.
Operates 240v. 50 cycles.

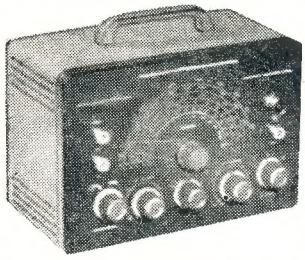

HEATHKIT SG-8 R.F. SIGNAL GENERATOR KIT

WAS £25-6-0

NOW £19-15-0

Designed for general service applications, the SG-8 covers 160 Kc. to 110 Mc. on fundamentals in five bands, and on up to 220 Mc. on calibrated harmonics of the fundamental frequency. Weight: 8 lb. Size: $9\frac{1}{2}$" x $6\frac{1}{2}$" x 5".
Operates 110v. 60 cycles.

MAIL ORDERS delivered FREE in metropolitan areas of Adelaide, Brisbane, Melbourne, Perth, and Sydney. Order now from your nearest W.F. office—enclose your cheque or M.O. Or write for details of Heathkit Each Payment Plan.

HEATHKIT V-7AE VACUUM TUBE VOLTMETER KIT

WAS £32-8-0

NOW £27-10-0

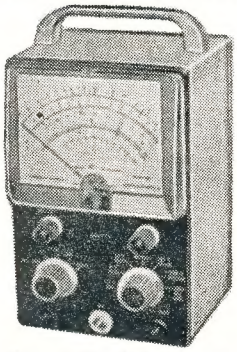

An instrument time proven for dependability, accuracy and overall quality—one of the finest investments you can make! Specifications: D.C. volts: 7 ranges 0-1.5 to 1-1,500. Input Resistance: 11 megohms. Sensitivity: 7,333,333 ohms per volt on 1.5v. range. Accuracy plus or minus 3% full scale. A.C. volts: 7 r.m.s. ranges 0-1.5 to 0-1,500. Accuracy plus or minus 5% full scale. Weight: 7 lb. Size: $7\frac{3}{8}$" x $4\frac{3}{4}$" x $4\frac{1}{8}$".
Operates 240v. 50 cycles.

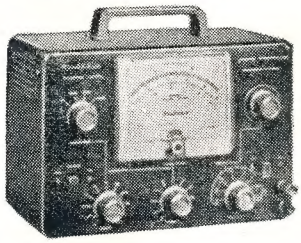

HEATHKIT AG-9U AUDIO SIGNAL GENERATOR KIT

WAS £50-1-0

NOW £41-9-0

Switch-select frequencies with ±5% accuracy and distortion less than 0.1% between 20 and 20,000 c.p.s. Frequency variable in steps of 1 c.p.s. from 10 to 100 c.p.s.; four-position multiplier switch provides decade relation on overall ranges of 10 to 100,000 c.p.s. Attenuator system operates in steps of 10 db. and is also calibrated in eight full scale meter ranges of 0.003, 0.01, 0.03, 0.1, 0.3, 1, 3 and 10v. r.m.s.
Operates 240v. 50 cycles.

NO DEPOSIT PURCHASE PLAN

Only ONE down-payment is necessary to acquire your first Heathkit . . . after that additional Heathkits are yours for NO FURTHER DOWN-PAYMENTS providing your total of monthly re-payments is sufficient to cover the deposits required on your new purchase. See W.F. now!

WARBURTON FRANKI

SYDNEY: 307 Kent Street. Phone 29-1111.
NEWCASTLE WEST: 844 Hunter Street. Phone 61-4077.
WOLLONGONG: 80 Keira Street. Phone 2-5444.
ADELAIDE: 204 Flinders Street. Phone 8-1711.
BRISBANE: 13 Chester Street, Fortitude Valley. Phone 51-5121.
MELBOURNE: 359 Lonsdale Street. Phone 67-8351.
PERTH: Tough Instrument Service Co., 993 Hay St. Phone 21-9767
(Prices slightly higher in W.A.)

A G.G. LINEAR AMPLIFIER

J. K. HERD, VK3JK*

NOW that continuing numbers are converting to s.s.b., a simple and reliable amplifier will be interesting to those in search of such equipment.

For those operators whose exciters have a pair of 6146s, or similar, as output amplifiers, "barefoot" operation is in order provided they work into the recommended load impedance—usually 50 ohms.

For the fellows who build their own, a power supply from the old Class C stage may be employed effectively when modified for linear amplifier use; the main thing being the provision of a capacitor bank of high value—between 25 and 100 μF.

Tubes such as 811, 809, 830B, TZ40, 805 and, in fact, any triodes that work well as Class B modulators, make splendid g.g. amplifiers. Tetrodes are not quite so easy to handle, hence the advocacy of the above triodes. With a plate supply of 1,000 volts, 811s or 809s work beautifully, so this article can be meant to refer to their use in the g.g. mode.

Tube sockets are best sub-chassis mounted and in that way we may isolate input from output more easily, and provided the usual care is taken with layout, no problems should arise.

In this regard, particular attention must be given to the parasitic suppressors in the plate leads of the tubes; the resistors used **must** be non-inductive types of 2 watt rating and have no wire filament in their cores. A 2 watt 100 ohm type has a 2½ turn coil surrounding, or concentric with the resistor.

The g.g. filament choke (RFC3) may be home-made by using a bi-filar winding on a ferrite rod, such as is used for a loop-stick antenna in a portable receiver. The inductance is not critical, really, but one should have about a four inch winding at least, of wire sufficiently heavy to take the filament current.† RFC4 is a self supporting coil of 18 gauge enamelled wire—20 turns of ½" diameter.

The rest of the circuit is self explanatory, but **do not** excite the amplifier before the h.t. voltage is applied to the plates, for grid current can go up to 250 mA. in the unloaded condition.

When tuning, dip and load the plate circuit of the final until the dip is hardly discernible, when the grid current should be round 50 mA. Separate meters in the plate and grid are not luxuries, but are there to show exactly what is happening and a reflectometer or monimatch, likewise, is extremely useful to indicate maximum output. Loading beyond this optimum point by increasing coupling (decreasing value of C4 or C5) merely degrades operation and does not increase the r.f. output.

When installing C4 in the final, it sometimes pays to completely insulate it from the crassis, and earth it at one point only—that at which C3 is earthed.

No troubles should be encountered with the unit with the possible exception that variants of the parasitic suppressors may be needed, but provided due care is taken, nothing serious in this regard will be noticed either.

The required driving power is approx. 25 watts and the amplifier shows a characteristic impedance to the driver of 150 ohms or thereabouts.

For those who intend using it with an exciter having a pair of 6146s, a non-inductive swamping resistor is suggested, as shown at R1, for these reasons: (a) It provides a constant load, (b) Enables reasonable matching, and (c) Avoids overdrive. This latter is important.

Notwithstanding what has been written regarding driving energy in excess of that required for excitation appearing as useful output power, overall performance improves vastly when optimum drive is arranged by swamping excess driving energy resulting

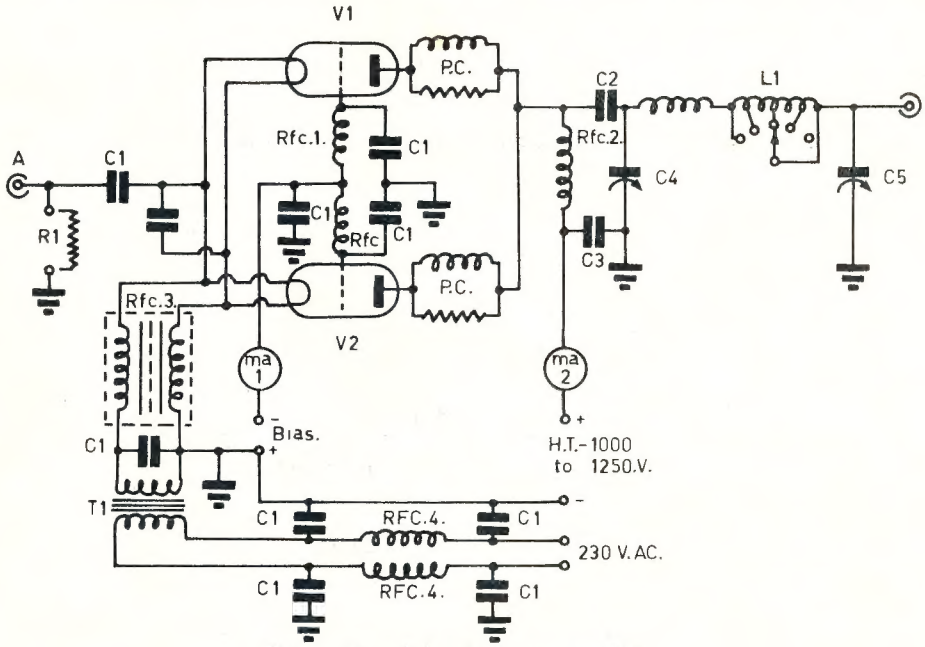

Fig. 2.—Grounded Grid Linear Amplifier.

C1—0.01 μF. disc ceramic, 600v.
C2—500 pF. 15kv. (t.v. type).
C3—1,000 pF. Simplex disc.
C4—260 pF. Eddystone (or similar, 1,200-1,500v. rating).
C5—3 or 4 gang b.c., all sections in parallel.
L1—Pi net coil—Willis ceramic type.
MA1—0-250 mA. meter.
MA2—0-500 mA. meter.
P.C.—See text.
RFC1—Eddystone v.h.f. (or similar).
RFC2—H.t. plate type for use with pi net (Willis).
RFC3—G.g. fil. choke (wound on ferrite rod).
RFC4—See text.
T1—Filament transformer to suit tubes.
V1, V2—809 or 811.

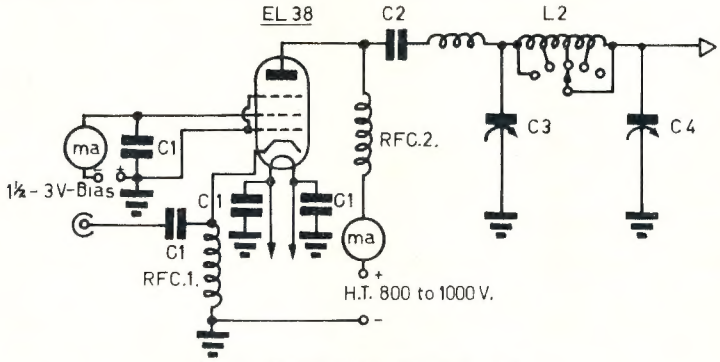

Fig. 1.—Driver Stage for G.G. P.A.

C1—0.01 μF. ceramic discs.
C2—500 pF. 15kv. (t.v. type).
C3—250 pF. Eddystone or similar.
C4—3 or 4 gang b.c., all sections in parallel.
L2—Geloso Pi-Coupler—Type 4/112.
MA1—0-100 mA. meter.
MA2—0-250 mA. meter.
RFC1, RFC2—Geloso Pi-Coupler Chokes for Type 4/112 Coupler.
V1—EL38 (or counterpart).
Note.—C1 is placed right at tube socket.

* Shelborne Court, Mornington, Vic.
† Available from Aegis Manufacturing Co.

from the exciter being operated in a properly loaded condition.

If there is not enough power to fully excite the final amplifier, then a tube such as the EL38 is recommended and shown in the circuit of the driver stage.

This latter circuit is self explanatory and the same care is used in layout as with the final. Ground the grids, other than the control grid, at the socket, and that one is grounded for r.f. at the socket by a 0.01 μF. ceramic disc, and 1½v. to 3v. negative bias is applied through the meter, depending on plate voltage. Up to 1,000v. may be used on the EL38 in such fashion. When the EL38 plate voltage exceeds 700v. G3 should be left floating and **not** be earthed. The 811s or 809s are likewise biased, or not biased, according to the voltage on the plates.

Having applied the plate voltage, resonate the plate circuits with C3 in the driver and C4 in the final, and have plate loading condensers at maximum capacity. Cautiously increase loading by decreasing the capacity in these latter condensers, meanwhile maintaining resonance with C3 and C4.

One of the main advantages of a circuit of this type is that we need not provide "stiff" bias and screen supplies, properly regulated, as required in AB1 or AB2, and neutralisation becomes unnecessary.

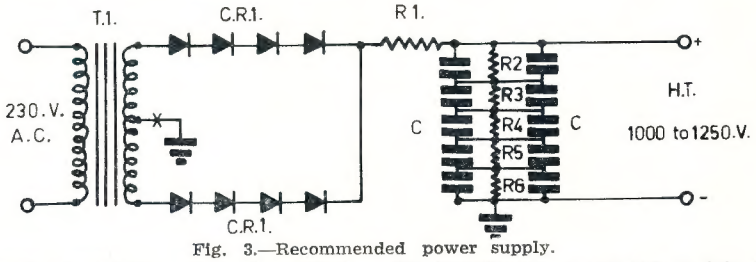

Fig. 3.—Recommended power supply.

C—Five pairs electrolytics in series-parallel (see text).
CR1—OA210 or OA211, or International or A.W.V. equivalents, or Ducon 1N2094 (400 p.i.v.) or 1N2095 (500 p.i.v.) (see text).
R1—800 ohms, 100 watts.
R2 to R6—25K ohms, 50 watts each.
T1—Transformer to suit 811s or 809s (see text).
Note.—If it be thought necessary, a 50 ohm resistor of adequate rating can be used in the centre tap at "X".
(Resistors should shunt each rectifier to equalise the voltages across them. Low value mica condensers may also be used. —Ed.)

POWER SUPPLY

Linear amplifiers for s.s.b. require large plate currents for short durations, so we need an energy reservoir of ample capacity to meet the demand and maintain good regulation. A short duty cycle type supply with a very large capacitor across it is the easiest and maybe the best approach to this problem and the capacitor should not be less than 25 μF., but with benefit it can go to 100 μF. This capacitor can easily be made by employing several high capacity electrolytics in series-parallel, assembled on a piece of tempered Masonite with a bleeder made up from resistors used across each bank of capacitors. Such a supply has been used here for over 12 months completely free of any trouble.

Ducon (Aust.) make suitable condensers and Type ECS457 (120 μF., 475 v.p.) or EMG2035 (200 μF., 400 v.p.) are easy to arrange in series-parallel to provide any desired working voltage or capacity. In my own case ten units are in five banks of two, giving 2,000 v.p. and 80 μF.

A word of warning in regard to such a capacitor bank is required. **Be certain** that it is discharged before touching it, for it has a lethal kick. (Always discharge through a resistor—never by a direct short!!)

Silicon diodes provide a cheap and highly effective rectifier bank and reduce heat and a great deal of weight. The type required is one with a rating of 400 or 500 p.i.v. and replacement type transformers may be employed to give the required d.c. voltage by employing bridge circuitry if necessary.

Since a short duty cycle type supply requires only a current rating of twice static plate current plus bleed, transformers of moderate rating and low cost can be used. To decide the number of diodes required in series, first determine the p.i.v. of the transformer and divide by p.i.v. of the diodes chosen, e.g. if we have a transformer p.i.v. of say 1,750, then 4 × 500 p.i.v. or 5 × 400 p.i.v. are required in each secondary lead.

The 1,000 ohm resistor in series with the positive h.t. to the capacitor is necessary to protect the rectifiers from initial surge and this helps to prolong their useful life.

No doubt the academically minded will have plenty of scope to criticise this arrangement, but those who have heard the signal from VK3OZ and VK3JK in particular can judge its practical value. ●

SOME NOTES ON

BANDPASS CRYSTAL FILTERS

R. G. ROPER, VK5PU*

AN excellent article on the use of bandpass crystal filters appeared in "A.R." for August 1961.

Some further points on filter matching may be of interest. In some cases, where a new receiver is being constructed, or when the first i.f. transformer in the receiver being modified is "get-at-able," input matching, with the use of a purely resistive output load, may be somewhat easier than the incorporation of an additional tuned circuit as load.

The circuit of Fig. 1 has been found satisfactory for optimising the performance of filters using a wide variety of crystals, and even for crystals of differing activity. (Matching crystals by comparing their activity in a standard oscillator circuit which excites the series mode has been found to be a satisfactory method for multiple section filters, but is not essential for simple filters.)

* 27 Leslie Street, Woodville, South Australia.
Reprinted from VK5 Bulletin.

The only modification to the existing i.f.t. is the removal of the parallel C across L2, which is usually of the order of 100 pF. If not, change the 180 pF. in Fig. 1 to a value such that, in series with C1 and C2, it resonates L2 at the i.f. frequency. (In general, the value of C1 and C2 in series should equal the original value of the capacitor shunting L2—Ed.) Adjustment of C1, C2 and the slug in L2 will, in most cases, provide a satisfactory bandpass curve. If such cannot be achieved, variation in the 100K i.f. amp. grid resistor, or the addition of resistance across L2 (try resistances from 2K up to 50K) should do the trick. For matched crystals, C1 and C2 should have approximately the same value.

If the receiver S meter is used to plot the filter characteristic, remember that with the a.v.c. off (which it must be, otherwise weird things happen as the selectivity is varied inside the feedback loop) the S meter no longer has a logarithmically calibrated scale, but is purely an output voltmeter. Detector output dropping from S9 + 6 db. to S5 does not mean a drop of 30 db., but a drop of 6 db. (assuming a linear S scale on the meter, and a linear detector).

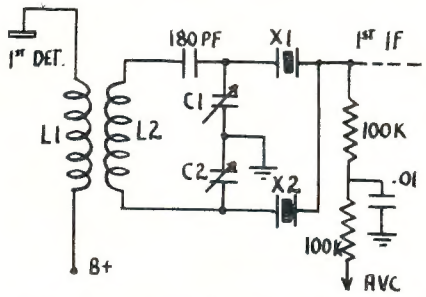

The bandpass characteristic of the filter alone has a very pronounced dip between the frequencies of the two crystals. Usually, two i.f. stages after the filter, with four tuned circuits (two i.f.t's.) will be sufficient to fill up this hole and give a flat top with nice steep sides as the overall characteristic.

A word about layout. Since skirt selectivity of the order of 50 db. down 1 kc. outside the passband can be achieved with this simple half lattice filter, feedback around the crystals must be held well below this figure. This usually necessitates some shielding between input and output of the filter below chassis, as well as between the crystals if mounted above chassis. If the crystals themselves are shielded by enclosing them in small cans (not both in the one can!), make these as large as possible to keep down shunt capacity across the filter output. If a resonant output circuit is used, this is not so important. ●

A TRANSISTORISED CONVERTER FOR 144 Mc.*

J. SPECIALNY, JNR.

• A 144 to 7 Mc. converter is described which provides excellent results in the 2 metre band. Transistors are used throughout, and the only supply voltage necessary is a 12 volt battery.

The circuit (see Fig. 1) is conventional and no difficulty should be experienced in duplicating it. A Philco 2N1742 is employed in the r.f. amplifier stage which is fixed-neutralised by capacitor C5. Capacitance dividers C1 and C2 provide a 50 ohm match to the input circuit. Coil L1 and capacitor C3 form the input tuning.

The base of the amplifier is tapped on L1 to match 75 ohms. Coil L2 and capacitors C7 and C8 tune the output of the amplifier. A portion of L2, together with neutralising capacitor C5, form the neutralising network.

The base of the Philco 2N1743 mixer is tapped down on L2. The output of the mixer is coupled from the collector by capacitor C10 and output coil L3 at 7 Mc. Output winding L4 provides an output at 50 ohms to permit coupling to the input of a communications receiver.

A Philco 2N1744 is employed as a local oscillator and operates 7 Mc. higher than the signal frequency. Coil L5 and capacitors C12 and C13 form the tank circuit.

The local oscillator signal is injected into the mixer emitter through capacitor C11 by tapping the oscillator coil L5.

* Copyright. Philco Corportion, Pennsylvania, U.S.A.

OPERATION AND RESULTS

The r.f. bandpass is about 4 Mc. at the 3 db. points. A communications receiver capable of tuning the 7 Mc. band should be used as the i.f. system. If a fixed tuned converter operation is desired, the tuning range will be limited to about 2 Mc. with the mixer output coil used. The frequency range of 144 to 146 Mc. can be tuned without touching the converter once the local oscillator frequency has been set. The i.f. system then tunes from 6 through 8 Mc.

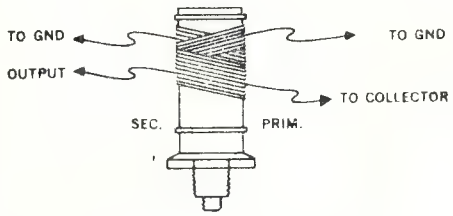

FIGURE 2

COIL DATA

L1—4 turns 18 bare copper wire ¼" diam., winding length ¼". Base tap 1 turn from ground end of L1.

L2—6 turns 18 bare copper wire ¼" diam., winding length 4/10". Ground tap 4 turns from collector end. Output tap ¾ turn from ground tap.

L3—30 gauge Nyclad closewound to occupy ½" of winding space on a ⅜" coil form (see Fig. 2 for construction details) Red Dot Core.

L4—5 turns 30 gauge Nyclad over cold end of L3.

L5—4½ turns 18 gauge bare copper wire ¼" diam. spaced to occupy ⅝". Emitter tap ⅛ to ¼ turn from ground end.

Note.—In tuning the 7 Mc. output coil, the powdered iron slug is varied so that it meshes only the collector end of L3.

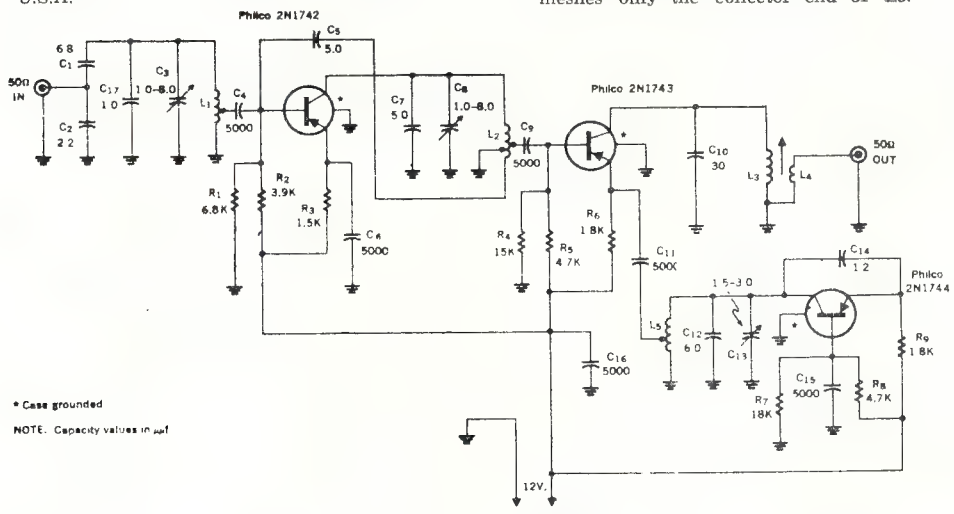

Fig. 1.—144 Mc. Converter.

C1—6.8 pF. mica plus or minus 5%.
C2—22 pF. disc ceramic.
C3, C8,—1.0-8.0 pF. tubular trimmer.
C4, C6, C9, C11, C15, C16—0.005 µF. disc ceramic, 70v.
C5, C7—5.0 pF., mica, plus or minus 5%.
C10—30 pF., mica, plus or minus 5% for 7 Mc. i.f. output.
C12—6.0 pF. silver mica, plus or minus 5%.
C13—1.5-3.0 pF. air variable.
C14—1.2 pF. axial ceramic.
C17—1.0 pF. mica.
R1—6.8K, ½w. carbon.
R2—3.9K, ½w. carbon.
R3—1.5K, ½w. carbon.
R4—15K, ½w. carbon.
R5, R8—4.7K, ½w. carbon.
R6, R9—1.8K, ½w. carbon.
R7 18K, ½w. carbon.
TR1—2N1742.
TR2—2N1743.
TR3—2N1744.

If continuous tuning of the converter is desired, a vernier dial and a panel can be added to the converter. The communications receiver in this case is operating as a fixed tuned i.f. system operating at 7 Mc.

The power gain at 146 Mc. is about 30 db. and falls off to 27 db. at 144 and 148 Mc. The noise figure of the particular 2N1742 used was 5.0 db. at 200 Mc. and the overall noise figure of the converter should be no greater than 5.0 db. at 144 Mc.

Table 1 indicates the value of collector current flowing in each of the stages.

	Collector Current
R.f. amplifier	2.5 mA.
Mixer	1.7 mA.
Local oscillator	1.8 mA.
Total (with bleeder current)	8.3 mA.

Table 1.

A stand-by receiver switch should be located in the positive leg of the 12 volt supply. The co-axial antenna switching relay should be located as near as practical to the input terminals of the converter. •

☆

HINTS AND KINKS

DIAL TO READ 0-360°

Have you ever owned a radio tuning knob that has a metal scale attached to it by screws that reads from 0-100° or 0-180° and you wish it was calibrated from 0-360°?

It is easily done. Undo the screws and reverse the metal scale so that the uncalibrated side shows to the front. Place a 0-360° circular protractor (the same size as the metal scale) on top of the metal plate. Then place the knob on top of the protractor. When everything is in line, bore the necessary holes through the protractor and then assemble the apparatus. This all equals a good 0-360° tuning knob.

Warning. If the tuning knob has a white mark engraved on it for 0° make sure it is in line with 0° on the protractor before boring the holes.

This tuning knob can be used successfully with a vernier on grommet drive.

—Brad Booth, VK5/ZL3.

GELOSO ML209/FE FRONT-END RECEIVER TUNING KIT

Covers All Amateur Bands.

PRICE £25 plus 25% Sales Tax
(Please add 10/- Freight and Packing)

WM. WILLIS & Co. Pty. Ltd.
428 ELIZABETH ST., MELBOURNE, VIC.
Phone 34-6539

NOW AVAILABLE!

1962 EDITION

RADIO AMATEUR'S HANDBOOK

Published by A.R.R.L.

An invaluable reference work and text for everyone—hams, engineers, lab. men, technicians, experimenters, students, purchasing agents.

Price 51/6 plus 2/6 Postage

OBTAIN YOUR COPY NOW! *MAIL ORDERS BY RETURN*

McGILL'S AUTHORISED NEWSAGENCY

Established 1860.
"The Post Office is opposite"

183-185 ELIZABETH STREET, MELBOURNE, C.1, VIC.
Phones: 60-1475-6-7

REDUCE THE SIZE AND COST OF YOUR NEW EQUIPMENT

TYPICAL UNITS USING ZEPHYR MATRIX SYSTEM

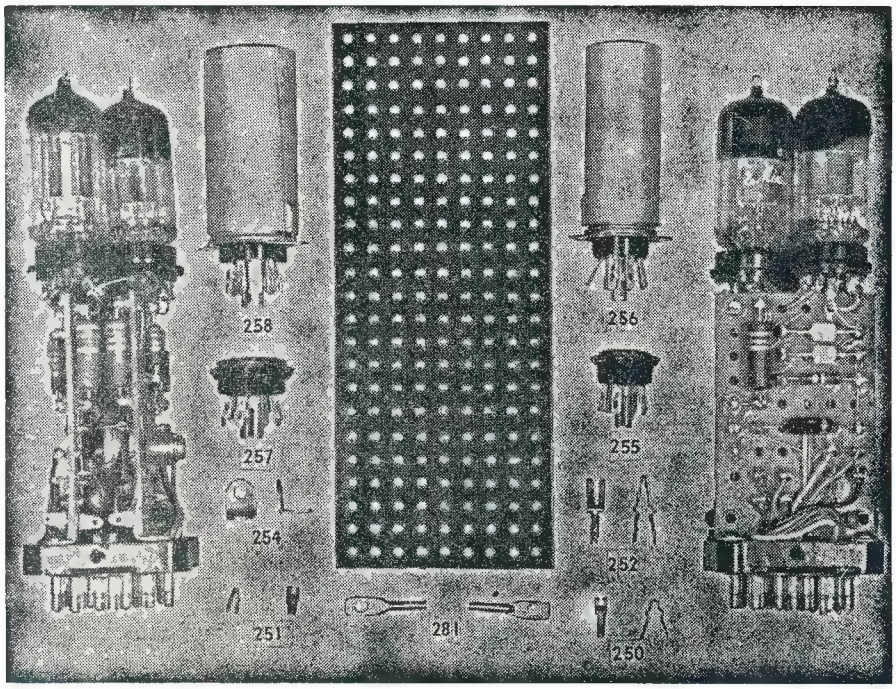

Leaflets and Price List available from all leading Wholesalers.

ZEPHYR

Enquiries invited from Manufacturers.

ZEPHYR PRODUCTS PTY. LTD. 58 HIGH STREET, GLEN IRIS, S.E.6, VIC.
Phones: BL 1300, BL 4556

26th FEDERAL CONVENTION AT PERTH, 1962

The 26th Federal Convention of the W.I.A. was held in Perth at Easter for the first time in 37 years. The 2nd Federal Convention was held in that State in 1925.

The following State delegates and members of F.E. were present:—

Max Hull, VK3ZS, Federal Pres.
Bill Mitchell, VK3UM, Fed. Vice P.
Jay Lancaster, VK3JL, Fed. Sec.
Pierce Healy, VK2APQ, VK2 Del.
Alan Elliott, VK3AEL, VK3 Del.
Michael Owen, VK3ZEO, VK3 Ob.
Bert Hinkler, VK4AO, VK4 Del.
Phil Williams, VK5NN, VK5 Del.
Ron Hugo, VK6KW, VK6 Del.
Jim Rumble, VK6RU, VK6 Ob.
Ted Cruise, VK7EJ, VK7 Del.

With the exception of Phil Williams, who arrived by an earlier flight, the delegates from the Eastern States reached Perth at approx. 0215 on 20/4/62. They were met by a number of the locals who had generously made their homes available to accommodate the visitors.

The VK6 Division thanks those members for their patient wait at the airport, caused by the delayed arrival of the plane, and also for taking the visitors into their homes. There is no doubt that by doing so they contributed to the success of the Convention. The delegates themselves expressed their own gratitude at the end of the Convention and all were agreed that they had been overwhelmed with hospitality.

The Convention was opened at 1400 hours by the President (Max Hull), who welcomed the delegates and thanked the VK6 Division for making it possible to hold the Convention in Perth.

The Vice-President, and President-Elect (Bill Mitchell) supported the President's remarks.

Ron Hugo, President of the VK6 Division and Federal Councillor, was the first to respond on behalf of the delegates and local Division. He thanked Federal Council for choosing Perth as the venue for the Convention, and the President for his welcome.

Pierce Healy (VK2 delegate) concurred with Ron Hugo's remarks and expressed the pleasure of the delegates that such an important Convention could be held in Perth, as this also provided the opportunity for most delegates to visit VK6 for the first time.

After the minutes of the 25th Convention had been read and confirmed, the President read his annual report and the reports of all committees and co-opted members of the Federal Council. This report, which will be published in "A.R.," presents an impressive testimonial to the work of F.E. and the members of Federal Council.

Max Hull was elected Chairman of the Convention and before commencing to discuss the agenda items, one minute's silence was observed in memory of the late John Moyle (VK2JU) and Doc Barbier (VK5MD) for their untiring work on behalf of Australian Amateurs in general.

The 55 agenda items were grouped into sections to enable subjects of similar nature to be dealt with more efficiently. The sections of the agenda were: (a) Constitution items, (b) Policy items, (c) Administration items, (d) I.T.U. items, (e) P.M.G.—Regulations, etc., (f) Contest items, (g) Magazine items by VK3 Division.

The agenda encompassed all the fundamental aspects of Amateur Radio, requiring the Convention to sit for long hours in order to deal with the mass of details involved. In four days the Convention actually sat for more than 30 hours.

On the Saturday night a Convention Dinner was held at a local restaurant, enabling the members of the Convention and local Division to get together informally and enjoy themselves. The VK4 delegate was intrigued by the baked bananas and pineapple served and concluded they were served to make him feel at home. The Dinner was enjoyed by all attending and the discussions following it were very informative.

After all the agenda items had been dealt with, the Convention was opened for general business. The items arising in general business were mostly held over because of the lack of time. Despite the time problem, the traditional informal discussion took place after the Convention closed.

The date of the next Convention was fixed at Easter 1963. VK3 offered Melbourne as the venue, but urged Federal Council to consider Sydney as the Convention site if VK2 wished it to be held there and if financial arrangements did not preclude it.

The Chairman (Max Hull) delivered his closing speech, repeating his thanks to Ron Hugo and the VK6 Division for the success of the Convention. He thanked everybody connected with the smooth running of the Convention and finally officially welcomed Bill Mitchell as the President, pledging all his support to him and other members of F.E.

Following the Chairman's closing remarks the delegates made their final comments.

Bert Hinkler (VK4 delegate) praised F.E's. work and welcomed Bill Mitchell as the new President.

Ron Hugo (VK6 delegate) answered for all VK6 Division to thank the President and Federal Council for the opportunity to repay the hospitality he has received at past Conventions.

Pierce ("Cupid") Healy (VK2 delegate) also thanked Ron and the VK6 Division. He congratulated Max Hull on his leadership during his four-year term as President, during one of the most troubled periods for Amateurs in this country and hoped Bill Mitchell would have smoother times during his Presidency.

Alan Elliott (VK3 delegate) expressed his and VK3 observer Michael Owen's pleasure at being present at the Convention and their thanks to F.E. He also complimented the host Division on its hospitality.

Ted Cruise (VK7 delegate) expressed his agreement with all the previous speakers, also complimented Jay Lan-

(Continued on Page 15)

FEDERAL CONVENTION AT PERTH, EASTER 1962

Back row (left to right): Phil Williams, VK5NN; Ted Cruise, VK7EJ; Pierce Healy, VK2APQ; Alan Elliot, VK3AEL; Michael Owen, VK3ZEO (VK3 Observer). Front row (left to right): Ron Hugo, VK6KW; Max Hull, VK3ZS (Federal President and Chairman); Bill Mitchell, VK3UM (Federal Vice-President and President-Elect); Jay Lancaster, VK3JL (Federal Secretary); and Bert Hinkler, VK4AO. Photographer: Jim Rumble, VK6RU (VK6 Observer).

W.I.A. FEDERAL PRESIDENT'S ANNUAL REPORT, 1961-62

It is again my pleasure to present the President's annual report on the activities of the Amateur Service and the work of the Wireless Institute of Australia over the last year.

At the time I presented my last annual report the recommendations of the Radio Frequency Allocations Review Committee, which was a special Ad Hoc Committee set up by the Postmaster-General (Hon. C. W. Davidson, O.B.E.) to review the allocation of frequencies to Australian Communications Services in the light of decisions reached at the International Telecommunications Union Conference in Geneva in 1959, was imminently to be placed before the Government.

Subsequently the Government reviewed the recommendations of this Committee and accepted them in their entirety, the sections of the frequency table concerning the Amateur Service being notified to Federal Council at the time. I am now pleased to advise that the implementation of the section of the recommended frequency table of direct concern to the Amateur Service will become effective as from 1st July, 1962.

This has been a great achievement and our thanks go to the late John Moyle, Mr. Arthur Tinkler, past and present members of the Federal Executive and Officers and Councils of the Divisions, all of whom gave so much of their time and effort to fight the case for the retention of our frequency allocations.

Details of the Amateur Service Frequency Table and types of emission permitted in respect of each band will be found on page 1 of this issue. In this regard the P.M.G. Department has advised the Institute that, in view of the projected changes, it will replace all existing Amateur Station licences with new documents which will incorporate the information contained in the statement and these will be issued prior to the implementation of the new table. I understand these details will now also be included in the new Handbook for the Guidance of Operators of Radio Stations in the Amateur Service.

The Federal Executive met sixteen times during the past twelve months, which included two special meetings in connection with the forthcoming Convention and Constitutional matters. The attendance of members was excellent which indicated to me the sincerety and interest taken by each member in the general proceedings of the Executive and the individual work assigned to them. At this point I would like to extend my personal thanks to them for the support they gave me during the year, in particular Mr. Bill Mitchell (VK3UM), who acted as Minute Secretary as well as carrying out the extensive duties of Business Manager, and Jay Lancaster (VK3JL), who ably carried out the duties of Federal Secretary with most satisfactory zeal in a little over a year of office. Copies of the Minutes of all Federal Executive meetings were regularly forwarded to the Federal Councillors in each Division and I trust each Council subsequently received reports from their Federal Councillors to keep them appraised of the work of the Executive.

The Federal QSL Officer, Mr. Ray Jones (VK3RJ) again looked after the sorting and distribution of inward QSL cards with the usual efficiency he has applied to this task for many years.

In my report last year I expressed some disappointment at the number of messages handled on the Federal Traffic Channel in relation to the effort spent by the Traffic Officers in maintaining schedules every Monday night. This has not improved greatly and I would again like to stress with Federal Councillors that the use of a channel for this purpose has been permitted by the P.M.G. Department to facilitate urgent activities in relation to Wireless Institute administration, and for this reason I would like to see it used more often. Recently the P.M.G. Department investigated the operation of the channel and have permitted its continued operation. Mr. Reg Jepson (VK3JI) ably handled Federal Traffic when directed to the net, but it is with regret I have to advise that, after so many years of faithful service as Federal Traffic Manager, Reg has had to resign from the post. In the interim, as well as sorting QSL cards, Mr. Ray Jones has offered to take over operation of the Federal Traffic Channel.

The Federal Contest Committee again completed an excellent year's work organising, checking and computing the results of the various Contests under the jurisdiction of the Federal Council. It was gratifying to note the continued increasing interest in the Contests, particularly the National Field Day Contest which was more popular this year than has been evident for a number of years. With the increasing use of the compact transistorised equipment for mobile and portable operation even greater participation can be envisaged in future Contests. With the probability that the late John Moyle's name will be attached to this Contest, it is hoped that the Contest will reach the same popularity level as the Remembrance Day Contest.

The Remembrance Day Contest itself was again the most popular Contest of the year and congratulations go to the VK6 Division for gaining first place. The certificates have been delayed this year due to a hold-up in printing because the finished art work for the certificate was not satisfactory and a new design has now been completed which I feel safe in saying will be one of the finest certificates issued by the Wireless Institute and should serve as encouragement to Amateurs to compete in the Contest for a "prize winning place".

Dave Rankin, VK3QV, has satisfactorily represented the v.h.f. Amateurs on the Federal Executive. V.h.f. activity has continued to expand in all Divisions and several records have been created during the year. The VK6 State record was made between VK6BE and JA8BP over a distance of 5,490 miles. The Australian 144 Mc. record has been beaten by 20 miles by VK2ASZ (portable) operating from Mt. McAllister over a confirmed path of 1,342 miles to ZL3AQ in Ashburton, New Zealand, the previous record being held by VK5GL and VK6BO over a path of 1,322 miles in 1951. I understand that even better contacts have been achieved but they have not been officially reported and checked. Because such activity is of importance in the field of Amateur communications, both nationally and internationally, I would like to suggest that Federal Councillors maintain liaison with the V.h.f. Groups with a view to maintaining regular and official reports on long distance communications to the Federal V.h.f. Officer so that complete records can be kept.

It is interesting to note also that a growing interest is evident on 288 Mc. In January 1961, VK3ZCG and VK5AW made contact over a path of 262 miles. Here is a fertile field for Amateur experimentation and we hope to hear more about activity in this part (and upwards) of the frequency spectrum.

There has again been an upward trend in the issuance of L.A.O.C.P. Certificates and at the present time L.A.O.C.P. licensees are increasing over A.O.C.P. licensees by 2.3%. At this rate in 40 years time there will be as many L.A.O.C.P. licence holders as there are A.O.C.P. licence holders.

It will never be the desire of Amateurs generally that the lower frequency bands diminish in popularity and therefore a close watch each year and statistical records will be maintained in order that periodic "drives" can be made to encourage a percentage of L.A.O.C.P. licence holders to take their Morse code examinations.

The official W.I.A. broadcasts continued satisfactorily throughout the year and those which could regularly be monitored in Melbourne indicated a distinct upward trend in standard. The presentation of material by the announcers was of a higher order and many commendatory remarks have been heard in relation to the interesting programme material which has been evidencing itself in the broadcasts. The increasing use of tape recorders has also facilitated the presentation of the broadcasts which at all times should set the standard.

After countless hours of preparation of material in support of a request to the P.M.G. Department for the introduction of a Novice Licence, this has again been refused by the Department and a copy of the correspondence in this regard will be forwarded to the Divisions in due course. Although this is disappointing, further representations will be made at a later date in view of the reasons supporting the refusal being unsatisfactory to the Institute.

Slow Morse Transmissions continued in most Divisions and are proving of great benefit to those studying for the A.O.C.P. and requiring additional practice. Although remarks are occasionally heard that an operator receives no call back after his transmission as an indication that it was taken down by the listeners, I believe that generally speaking these transmissions are of value and should be maintained as a service to members and prospective Amateurs. In this regard I would take this opportunity to remind Divisions that under provisions laid down by the Department in relation to permission to transmit slow Morse, any cessation or recommencement of the transmissions from time to time should be notified to the Wireless Branch in the State concerned and the Federal Executive.

Last year I said that VK3WIA would be on the air with regular transmissions. Due to circumstances prevailing it has not been possible to complete this project and the transmitter has now been moved to the residence of the Federal Treasurer, Mr. Bob Boase (VK3NI), where work is progressing to complete the installation. Two unwanted masts were kindly donated by members of the Federal Executive and these are in the process of being stripped and repainted prior to erection.

Representatives of the Federal Executive conferred with the P.M.G. Department during last September regarding amendments to the Handbook for Guidance of Operators of Amateur Wireless Stations, and a number of anomalies were removed. In accordance with the International Telecommunications Union reference to Amateur transmitters, the new issue of the Handbook will be known as The Handbook for the Guidance of Operators of Radio Stations in the Amateur Service, sections therein being amended accordingly.

Our official journal, "Amateur Radio," has continued to progress and no doubt the improvements in format have been noted. The Publications Committee have put a most worthwhile effort into these improvements, including a most attractive cover, but it is only by advertising support and sales of the magazine that they can be maintained. I would like to think that each Division would make an all out effort to increase sales of "Amateur Radio" in their State and in this regard really rejuvenate the Sub-Editor system which was agreed to as a Federal Policy many years ago.

Although Australian Amateurs have not, at this stage, been able to participate very much in the Oscar satellite tracking projects conducted by the A.R.R.L., the entire project has been followed with keen interest. There has been a request for Australian participation and I currently am advised that VK2HO has been appointed by the Oscar Organisation as coordinator for all reports from VK Amateurs who are able to track the satellites. In Australia we have neither the number of Amateurs nor the finance to implement such projects ourselves, but it is pleasing to contribute assistance by those who are able and willing and our congratulations are extended to VK2HO.

Amateurs once again were of value with Emergency Communications during the January Victorian bush fires which devastated a wide area of the Dandenong Ranges, maintaining important v.h.f. links between control points and mobile vehicles and the Country Fire Authority Headquarters in Melbourne. The press and radio carried many reports of chaos with communications and confusion of authority and the experience pointed up many weaknesses generally in the existing communications networks, both Amateur and Commercial which, whilst in no way detracting from the able service rendered by those Amateurs involved, did prove that W.I.A. organisation needs overhauling if we are to maintain a useful service in such emergencies. Nevertheless, the Amateur Service showed its worth to the community despite some confusion and the following final message to the Institute from the Chief Radio Officer of the Country Fire Authority speaks for itself:

> "Express appreciation to the Wireless Institute of Australia for magnificent cooperation with the Authority over past few days. You worked unsparingly during the crisis, and we admire your efficiency and equipment. We will always call on you in the future for help. Thank you for setting up this important link today."

Despite modern precautions, emergencies such as the Victorian bush fires are always imminent and therefore the usefulness of an organised Emergency Network should never be permitted to lag. In official Defence circles there has been a lot of "messing around" hence our W.I.C.E.N. organisation, Federally, has not perhaps progressed as far as it should have done. I have asked Mr. George Glover (VK3AG) to submit a report on the current position which you will hear later in the proceedings of this Convention. In the meantime I can report that Mr. Glover will be sending out the official W.I.C.E.N. Identification Cards for use by W.I.A. Emergency Networks which should serve to get rid of one of the problems when emergencies arise—that of authority to enter the emergency areas.

However, such identity cards cannot be handed out indiscriminately and it is therefore mandatory that each Division properly form

its W.I.C.E.N. Network into an operating machine which will be trained in procedure and network operation to co-ordinate with whatever organisation is authorised or in control of the emergency, so that chaos and confusion just cannot exist. In this way the Amateur Service can be of real value and be an officially recognised Emergency Service. Essentially this problem remains with individual Divisions to implement its own organisation following a standard pattern set down by the Federal Executive many years ago, the general procedure for which has never changed in its general aspects.

The entire gamut of Amateur interests, as briefly touched on in this report, and many others which time and space precludes me from including, is obviously centred around **membership**. Our Institute is still growing but there are many more aspects to be fostered and encouraged before we can really say we are out of our teenage. Many dozens of zealous Amateurs in the past have paved the way for the current growth of the W.I.A. but it is only by membership that we can hope or expect to progress further. At the present time, from an approximate total of licensees in Australia, only 53% are members of the Institute. This is a position which must be improved upon and it is up to the Federal Council of today to take stern stock of the situation with a view to implementing changes which will bring about a "Change-of-heart" by those Amateurs who, for reasons of their own, don't want to support the Society which has done so much to preserve their domain for them. I believe this can only be done by a change in the constitutional set-up of our organisation—and this will be under discussion during the Convention—and added attractions in general activities which will encourage Amateurs to join.

As at the end of February 1962 the State membership figures were as follows:—

	Full	Associate	Total
VK2	801	442	1243
VK3	619	116	735
VK4	210	79	289
VK5	287	185	472
VK6	162	35	197
VK7	103	71	174

These figures—which neglect VK1, VK8, VK9 and VK0—show a total of 2,182 full members and 928 associate members, making a total membership of 3,110 which shows only an increase of 200 since the last Federal Convention held in Melbourne in 1959, although in actual fact thef ull members increasd by 269 and the associate members dropped by 69.

But let us have a look at the total number of licensees in the Commonwealth—

VK2	1377
VK3	1342
VK4	449
VK5	520
VK6	297
VK7	156

This shows a total of 4,141, again neglecting VK1, VK8, VK9 and VK0.

Now I commend this matter of membership to the serious study and the direct concern of the Federal Council. All the administrative work, both by Councils and the Executive, goes for nought if the membership is not there, and I believe our activities are worth more than a 53% membership of the total licensees, even if it means scrapping our present-day system or at least thoroughly overhauling it. I don't propose at this stage making suggestions about how it should be done, but I believe it can be done and must be done and this very Convention held here in Perth during the year of the British Empire Games could easily be the chopping block and the commencement of a new era. I sincerely hope it is because, and let us face facts, the problems ahead in the world of communications have only commenced to be a problem on a world-wide basis, and if we don't plan our organisation **now** to combat the problems of tomorrow, we shall have only ourselves to blame. Don't take this attitude as "defeatist" for that is farthest from my mind, but the obvious and irrefutable facts of the world's communications problems are there for anyone to see.

The day of parochailism has passed us by. We must all think on a national basis. We must think in terms of making our Institute, not just our Division, the powerful voice of the Amateur Service. The activities of every Division of the Institute, I believe, must be so integrated with each other and with its Executive body that we speak as one voice in the future defence for the existence of Amateur Radio. Such unification can only be reached by membership because membership not only provides the finance, but the personnel to carry out the work, and I therefore commend to the earnest attention of every Division of this Institute the importance of increasing the 53% membership it has of the 4,000 odd licensees in this country.

This is the conclusion of my fourth year as your Federal President—four years I have thoroughly enjoyed, particularly the years of our fight for the retention of the frequencies assigned to the Amateur Service.

I would like to take this opportunity of thanking all those members, past and present, who have served on the Federal Executive and the Divisional Councils during my years as President for their loyal contribution of time and energy in the interests of our great and unique hobby. After eleven years on the Federal Executive I am fully aware of the effort which must be made by all who take up office in the administration of an Institute like ours which must reach the length and breadth of our great Commonwealth and I admire and appreciate the work that has been done.

At the conclusion of this Convention, Mr. Bill Mitchell (VK3UM) will occupy the chair of the President of the Wireless Institute of Australia, and I would like to extend to him my sincere wishes for a successful term of office and to offer to him and the other members appointed to the Executive for the ensuing year my loyal support as Vice-President. May the Institute and the Amateur Service ever prosper.

—G. Maxwell Hull,
Federal President, W.I.A.

WIRELESS INSTITUTE OF AUSTRALIA—FEDERAL EXECUTIVE

Balance Sheet as at 28th February, 1962

Current Liabilities:						
Accounts payable		£18 14 0				
Convention Fund		804 19 4				
Trust Fund		150 8 8				
I.T.U. Fund		434 10 8				
			£1408 12 8			
Accumulated Funds:						
Balance 1st March, 1961	£689 3 6					
Add Surplus of Income over Expenditure for year		181 14 7				
			870 18 1			
			£2279 10 9			£2279 10 9
Current Assets:						
Commonwealth Savings Bank				£1268 9 7		
Accounts receivable				516 8 0		
Stock on hand				244 17 4		
						£2029 14 11
Fixed Assets (at cost, less depreciation):						
Furniture and Fittings					£16 19 10	
Typewriter (No. 1)					13 15 0	
Typewriter (No. 2)					21 15 0	
Duplicator					130 10 0	
Trophies					18 16 0	
Equipment—VK3WIA					48 0 0	
						249 15 10
						£2279 10 9

We have examined the books and vouchers of the Wireless Institute of Australia (Federal Executive) for the year ended 28th February, 1962. In our opinion the above Balance Sheet is properly drawn up so as to give a true and fair view of the affairs of the Federal Executive as at 28th February, 1962, and the attached Income and Expenditure Account is properly drawn up so as to give a true and fair view of the results for the year ended on that date.

Stock on hand at 28th February, 1962, has been accepted on the Certificate of the Treasurer.

Melbourne, 19th April, 1962. David Fell & Co., Chartered Accountants.

WIRELESS INSTITUTE OF AUSTRALIA—FEDERAL EXECUTIVE

Income and Expenditure Account for year ended 28th February, 1962

EXPENDITURE		INCOME	
Depreciation	£27 10 6	Per Capita Payments	£316 14 0
Maintenance	8 12 6	Profit on Sale of Log Sheets and Badges	35 0 10
QSL Bureau Expenses	8 0 0	Bank Interest	32 9 5
DXCC Expenses	3 13 1		
Postage and Telephone	20 9 10		
Printing and Stationery	89 2 7		
Insurance	11 2 10		
Licence—VK3WIA	1 0 0		
Cartage and Storage	19 1 10		
Recording Tapes	13 10 0		
Surplus of Income over Expenditure	181 14 7		
	£384 4 3		£384 4 3

WIRELESS INSTITUTE OF AUSTRALIA—FEDERAL EXECUTIVE

Statement showing Movements of Funds for year ended 28th February, 1962

CONVENTION FUND:			
Balance in hand as at 1st March, 1961			£11 11 10
Add Contributions—Special from Western Australia		£300 0 0	
Regular from—New South Wales	£178 0 0		
Victoria	142 0 0		
Queensland	80 0 0		
South Australia	65 0 0		
Tasmania	35 0 0		
		500 0 0	
			800 0 0
			£811 11 10
Less Expenses—Printing for Convention			6 12 6
Balance in hand as at 28th February, 1962			£804 19 4
TRUST FUND:			
Balance in hand as at 1st March, 1961			£102 1 7
Add—Sales of "Call Book Magazine"		£37 12 0	
Profit on Sales of "A Guide to Amateur Radio"		10 15 1	
			48 7 1
Balance in hand as at 28th February, 1962			£150 8 8
INTERNATIONAL TELECOMMUNICATIONS UNION FUND:			
Balance in hand as at 28th February, 1962 (unchanged)			£434 10 8

HALLICRAFTERS

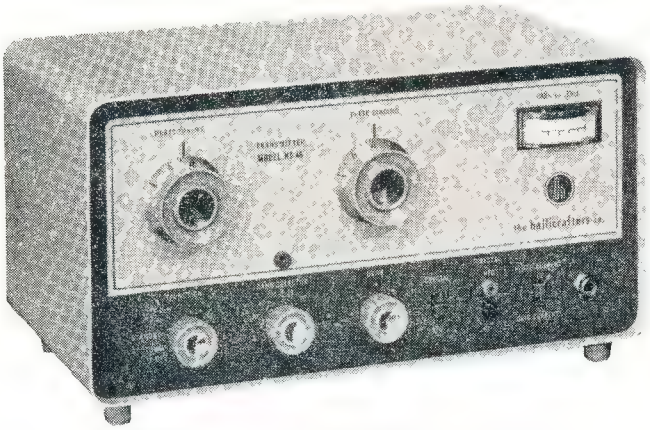

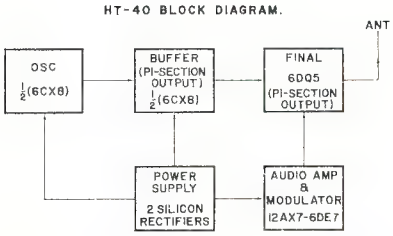

MODEL HT-40 TRANSMITTER

Hallicrafters HT-40 is a carefully designed c.w. and a.m. transmitter with features as important to old timers as they are to novices. Its compact size and light weight are ideal for use when space is at a premium. A perfect match for the SX-140 Receiver. And, last, but not least, band coverage of 80, 40, 20, 15, 10 and 6 metres. HT-40 (factory wired). HT-40K (kit).

FEATURES

★ Full 75 watts peak input; a.m. slightly less on 6 metres.
★ Six-band output (80, 40, 20, 15, 10 and 6 metres).
★ Two modes of transmission—c.w. and a.m.
★ Distortion on amplitude modulation less than 8%.
★ Hum and noise on the carrier down 35 db. or more.
★ Modern styling.
★ TVI-filtered.
★ Crystal controlled with provision for use of external v.f.o.
★ 52 ohm tunable pi network output for harmonic suppression.
★ Dual range meter for accurate tuning and carrier level adjustment.
★ Ideal c.w. keying.
★ A.m. modulation built in.
★ Matches SX-140 receiver for styling and band coverage.
★ Tubes and functions:—
6DQ5 power output amplifier.
6CX8 oscillator - multiplier-buffer.
6DE7 audio amplifier-modulator.
12AX7 microphone pre-amplifier - first audio amplifier.
Also two high efficiency silicon diode rectifiers.

Front Panel Controls:
- Function: Power Off, Tune, Stand-by, A.m., C.w.
- Band selector: 80, 40, 20, 15, 10, and 6 metres.
- Drive: Cannot tune to harmonics of desired output signal.
- Crystal-V.f.o. Switch.
- Crystal-V.f.o. Pin Jacks; accommodates Crystal or V.f.o. input.
- R.f. Output-Grid Current Switch, permits meter to read grid current or r.f. output.
- Key Jack, permits easy connection of the T.o. Keyer or Hand Key to the Transmitter.
- Plate Loading 0-100. Permits adjustment of plate loading to match antenna impedance.
- Plate Tuning. Adjusts final tank circuit to desired operating freq.

Rear Chassis Control and Connectors:
- Co-axial Antenna Connector.
- Microphone Connector.
- Microphone Gain Control.

General:
- Grey Steel Cabinet.
- 13⅜" wide x 8⅛" deep x 6⅝" high.
- Weight: 19 lbs.

Price (tax included) **£93-6-1**

Sole Australian Representatives:

W.F.S. ELECTRONIC SUPPLIES CO.

225-7 VICTORIA RD., RYDALMERE, N.S.W. Phone 08-1715

Sole Victorian Agent: **ELECTRONIC SERVICES, Douglas Street, Noble Park, Vic. Phone 746-8446**
Sole South Aus. Agent: **TELEVISION & RADIOTRONIC CO., 11a Gays Arcade, Adelaide**
Sole Queensland Agent: **GENERAL IMPORT DIST., 135 Lutzow Street, Wellers Hill, Brisbane**
Sole West. Aust. Agent: **NEIL JAMES & CO., David Jones Arcade, Barrack Street, Perth**

THE MODMETER

(Continued from Page 3)

circuit for maximum gain. Now switch S1 to T and decrease the capacity of the 3-30 pF. receiver trimmer until the background noise only creates a small trapezoidal pattern on the c.r.t. screen. Only a small capacity will be needed for good response.

SETTING-UP FOR TRANSMIT

Adjust L2 for resonance in the required band and connect the external aerial to J2. Then alter the 100 pF. condenser in the 7193 grid for maximum pattern height on the c.r.o. Back off L2 until the vertical trace on the c.r.o. occupies about one half to one third the screen height.

PATTERN INTERPRETATION

It is suggested that the A.R.R.L. Handbook be consulted in order that the user can become familiar with the type of pattern presented on the screen of the "Modmeter".

GENERAL

If you take my tip and build this unit you will see, as I have done, why so many signals don't sound right. It will be very obvious how incorrect many Amateurs are when they say "You could do with more audio OM". In many cases the station concerned is already peaking over 100% modulation! Furthermore, you will also see that many stations only peak 50-60%, then wonder why they do not receive flattering reports.

The main point is that with the "Modmeter" you **know** just how you are modulating, hence can avoid the offence of over modulation. (In addition, you can listen to your own horrible audio before criticising the poor quality from the other station.)

By using an external aerial for "transmit" the "Modmeter" becomes a versatile and accurate field strength meter. It will enable you to load your rig for maximum radiated power, and not rely upon plate current meters, pea lamps, etc. When used for loading and tuning adjustments, I have found the "Modmeter" enabled me to eliminate harmonic radiation which was previously quite strong some half mile away from the station.

Using the "Modmeter" to give truly candid reports to the other station may not be in the best interests of winning friends!—but you can be assured your signals are clean.

For those who use c.w., a transistorised r.f. powered b.f.o. could readily be constructed to fit into the "Modmeter" case, so enabling you to possess a complete monitor.

Should you require additional details you may contact me on 20 or 40 metres, or use the 600-ohm lines.

From the foregoing you will have gathered that I am really wrapped up in the virtues of the "Modmeter", and believe me, after you have built your unit, you will wonder why you ever thought they were just a gimmick.

I look forward to **seeing** you on the band, but watch your modulation, as I will be! ●

[This article has been based upon an idea originally presented by "CQ" Magazine, under the title of the "Monoscope". Editor.]

Technical Correspondence

ERRATA—"FOR 288 Mc. ENTHUSIASTS"

Editor "A.R.," Dear Sir,

Some errors and omissions have unfortunately occurred, both in the original "Bulletin" article and its subsequent "A.R." counterpart.

C1 is referred to in the text, but is not specified on the circuit diagram. It is the 100 pF. from crystal to ground.

The plate decoupling resistor of the pentode section of the 6BL8 should be 2.2K, not 22K.

Similarly, the 832A tripler grid resistor should be 47K, not 4.7K.

Some coil data is missing. In any efficient multiplier chain, proper L/C ratios are of the utmost importance.

L1 is 30 turns, No. 33 B. & S., on an Aegis ¼" diam. slug tuned former in miniature can.

L2 is 6 turns, No. 18, on ½" diam., with turns spread so that 48 Mc. drive to the triode section can be peaked with the 25 pF. trimmer just meshing.

L3 is 4 turns, No. 18, on ⅜" diam., as is each half of the 832A tripler grid coil.

For the various currents specified, h.t. is 250v.

Addenda.—In the interests of efficiency, all fixed C should be mica, and the trimmers air dielectric with ceramic insulation. A PTFE tube socket is preferred.

Sorry all this information was not in the original article (which was a report of part of a lecture).

—Bob Roper, VK5PU.

★

R.D. CONTEST, 1962

The Remembrance Day Contest will be held on Saturday, 18th, and Sunday, 19th August, this year. Owing to lack of space, the rules have been held over until next issue.

★

IT HAS BEEN SAID . . .

"We, all of us, have our own way of doing what we feel to be our best. No amount of exhortation on my part will change this in regard to Institute activity. During the past eighteen months, as Divisional President, I have urged, cajoled, and exhorted members in what I have felt to be the best interests of Amateur Radio movement, the W.I.A., and the N.S.W. Division. The amount of useable reaction produced can only be classified as minute.

"Two years' service on Council is more than average for the N.S.W. Division. This is in striking contrast, for instance, to the Victorian Division where Councillors go on for year after year, almost like the proverbial brook. Perhaps service on the N.S.W. Council is more rigorous: or would 'hazardous' be a better word?"

—President, N.S.W. Div., Bill Lewis, VK2YB.

★

LICENSED HUSBAND AND WIFE COMBINATION

The Bundaberg Radio Club, wishing to publicise and propagate the interest of Amateur Radio, publicised in the local press that we believed Mrs. Joscelyn McGrath (who has just obtained her full Amateur licence) and Rusty 4JM to be the only husband and wife full licence combination in Queensland and probably Australia (There are others in Australia—Ed.), and also that Joscelyn was the only fully licensed XYL in Queensland. The club would greatly appreciate news of any other husband and wife combinations or fully licensed XYLs. We believe it is time more XYLs took to Amateur Radio and, in fact, Bundaberg has two XYLs in its present class of 24 students.

So any combinations mentioned above, let's hear from you please. We need you to bolster up our publicity campaign to fill those bands, which we are forever fighting to hold, with new recruits.—VK4MZ.

FEDERAL CONVENTION, 1962

(Continued from Page 11)

caster on his efforts as Federal Secretary.

Phil Williams (VK5 delegate) claimed the other speakers had left him nothing to say. He complimented VK6 on the arrangements for the members of the Convention.

Bill Mitchell, the new Federal President, stated he has attended eight Conventions so far, and the 1962 one was the best he can remember. The conference room made available by the co-operation of the Australian Broadcasting Commission enabled the conference to be held in comfortable and suitable surroundings. To the host Division he gave his thanks for the arrangements for the Convention and setting a standard for following host Divisions to aim at. He also expressed Federal Executive's thanks to all Council members and stated his wish to be able to serve the W.I.A. as ably as Max Hull has done in the past.

The Convention finally broke up at 5 to 7 on Monday evening, after one of the most extensive studies of Amateur Radio in recent years. While the decisions of the Federal Council will no doubt be detailed elsewhere, the spirit of friendly compromise impressed the writer as perhaps the outstanding feature of this Convention. While this spirit exists between the Divisions, one has little doubt as to the future of our Federal body.

—Alyn VK6ZDM.

W.I.A. D.X.C.C.

Listed below are the highest twelve members in each section. New members and those whose totals have been amended will also be shown.

PHONE

Call	Cer. No.	C'nt-ries	Call	Cer. No.	C'nt-ries
VK5AB	45	266	VK6KW	4	206
VK6RU	2	260	VK3ATN	26	204
VK6MK	43	252	VK4HR	12	192
VK3AHO	51	236	VK4RW	23	184
VK4FJ	21	230	VK3BZ	3	176
VK3WL	14	211	VK4WF	16	173

New Member:

VK2AAK 58 100

C.W.

Call	Cer. No.	C'nt-ries	Call	Cer. No.	C'nt-ries
VK3KB	10	300	VK6RU	18	222
VK3CX	26	288	VK4HR	8	218
VK4FJ	29	269	VK3XU	48	213
VK3NC	19	255	VK7LZ	17	212
VK3FH	15	226	VK3YL	39	211
VK3BZ	6	222	VK2AGH	71	204

New Member:

VK5NQ .. 73 164

Amendments:

VK3ARX 66 179 VK7SM .. 72 122

OPEN

Call	Cer. No.	C'nt-ries	Call	Cer. No.	C'nt-ries
VK2ACX	6	300	VK3HG	3	241
VK6RU	8	276	VK3AHO	76	238
VK4FJ	32	275	VK4HR	7	233
VK3NC	77	260	VK3BZ	4	231
VK6MK	74	256	VK3JA	43	229
VK2AGH	83	252	VK3WL	45	225

New Member:

VK3TL .. 85 100

Amendments:

VK5NQ .. 81 176 VK7SM .. 84 141

W.I.A. QUEENSLAND DIVISION CONVENTION

Threatening weather cleared to allow the sun to shine on the W.I.A. Queensland Division Convention for 1962, held on April 14 and 15 at Alexandra Park, Alexandra Headland, on the near North Coast, about 70 miles from Brisbane. The site was a hostel, a huge old building, with a large recreation hall behind a large parking area at the rear where it was decided the stations should be set up.

The first to arrive were Peter 4PJ and XYL, Vic 4ZBT and XYL, Garry Franks, Vince 4VJ and just in time for a meal, Leigh 4RH (with XYL, harmonics and friend, Mrs. Andrews), all the way from Clifton. Not much progress was made in getting on the air until the arrival of Gil Bertram with an aerial system, three modern Hallicrafter rx's and a sideband transmitter.

Saturday morning was spent preparing for the visitors headed by Bill 4WX and friend. Most seemed content to settle in and examine the equipment until after lunch when competitions were programmed. Of course, 4WI was on the air most of the time making many contacts, mostly with those wanting to pass their good wishes to the Convention.

Eric 4XR arrived in time to conduct the Wide Bay and Burnett Branch's Saturday afternoon hook-up from the Convention and caught in his net quite a few stations. Leigh 4RH, who always comes well prepared, won the all-band scramble from Neal 4WW, who will be trying for the lead next year. A hidden tx hunt run by the V.h.f. Group was won by Ron 4ZBZ in 15 minutes.

Three minutes was all Vic 4ZBT needed to win the blindfold tx competition, but Joan (4RZ's XYL) took only 1½ minutes to take the women's section. An equipment inspection competition attracted much interest, and winner Ken Chiverton's entry of an all-band rx and two converters was admired and envied by all rivalling the finish and appearance of commercial equipment. Someone remarked it looked too good to work but work it does.

The 2 mx mobile of Vic 4ZBT was second in the competition judged by Pat 4KB and Harry 4HB.

Among the long distance travellers who registered on Saturday were John 4PU from Kingaroy and Bill 4SW (also XYL and harmonics) who came all the way from Maryborough for a few hours. Hope you can stay longer next time, Bill.

After the evening meal and much dragging of persons from the Hallicrafters, a barbecue was held to the moans of 30 people who said they couldn't eat more. Somehow, 60 breadrolls, 60 sausages and 10 lbs. of steak disappeared. Another try at the equipment and those who hadn't gone to bed were ready to call it a day.

Early risers on the Sunday roamed the ether for Alf 4OL on his way from Brisbane with the news. He was talked in to the Lifesaving Clubhouse but soon found the more modest quarters opposite. A crash midway through the W.I.A. broadcast signalled the arrival of Jim 4HZ from Gympie. Leigh 4RH got the greatest number of contacts in another all-band scramble and Dane 4ZAX took out another hidden v.h.f. tx hunt at the same time.

About 11 o'clock came the first time to get everyone together to ask when and where the next Convention should be held. The opportunity was taken to wish a good and profitable trip to Bert 4AO, off to the Perth Federal Convention. Organiser Vince 4VJ was given a vote of thanks for his efforts in organising the Convention. A simple W.I.C.E.N. exercise (h.f. and v.h.f.) kept everyone busy until lunch.

More blindfold tx competitions were planned for after lunch, but there was no time. Eric 4XR later presented prizes. Those not mentioned earlier: Best DX, Leigh 4RH; most distant visitor, Leigh 4RH. Matters decided since are: Greatest number of contacts by club or branch, Wide Bay and Burnett Branch; most distant club heard, Townsville; greatest number of contacts to Convention, George 4GG.

Ron Feenaghty, VK4ZBZ, at the microphone while operating mobile at the W.I.A. Queensland Division's 1962 Convention which was held at Alexandra Headland.

The final event, auctions of lots of equipment, donated by Evan 4EF and John 4RZ, attracted a lot of interest. Their donations and the efforts of auctioneer Eric 4XR, helped by Graham 4ZGN and Bob Campbell, brought the Division £20/7/-. More than 80 people passed through the Convention during the week-end and thanks go to all who had a hand in making the Convention much more than simply a financial success, which it was.

Associate Gil deserves special mention for his display of Hallicrafter equipment and his allowing members to test it. This, for young and old alike, was a dream come true, short lived perhaps, but not shared by too many in these parts. We hope the interest displayed rewarded you for your effort, Gil, and thanks again.

Brisbane trade houses deserve thanks too for the large quantity of technical literature supplied. Their effort was well received, and even city members remarked that they would have spent many hours to assemble the literature they received in minutes.

Those who registered were: 4PJ and XYL, Vic 4ZBT and XYL June, Garry Frank, organiser Vince 4VJ, Leigh 4RH, XYL and harmonic Chris, Mrs. Andrews, Gil Bertram, Bill 4WX and friend, Cress 4ZAO, Neal 4WW, Max 4HD, Bill 4WS and XYL Hazel and two friends, Pat 4KB, Harry 4HB, Ron 4ZBZ and XYL Val Dane 4ZAX, Ken Chiverton, Bob 4RB, XYL and harmonics including Jim representing Ashgrove Boy Scouts Radio Club 4AH, Tom 4ZBH, John 4PU, Bill 4XO, Peter 4EB, Ron Rudder, John 4RZ and XYL Joan, Bob Campbell, Malcolm 4ZEL, Allan 4ZAW, Fred Baker, Graham 4ZGN, John Lind, XYL and harmonics, Bill 4SW, XYL and harmonics, Harry 4ZHG, Eric 4XR, Ken 4ZGH, Bob 4SR, Bill Tomlinson and XYL, Ron Grove, George Berry, Len 4ZBS, Jim 4HZ and XYL Nell, Laurie 4ZBL, Kev 4ZDK and XYL Dawn, John 4ZDJ and YL and friend, Alf 4OL, ex-Ham Len Worrell, XYL and harmonics, Bill Groves, Bert 4AO, XYL and harmonics, Ron 4EZ, XYL and harmonics, Albert 4LT, George 4ZDG and YL, Mr. Franks, Mr. and Mrs. Groves, and we hope we missed no one.

The Queensland Division is indebted to the following business houses for their generous donations for prizes and the supply of technical literature which went to help make the Alexandra Headland Convention so successful: A. E. Harrold, Philips Radio Industries, R. H. Cunningham, C. Pearce, Chandlers Pty. Ltd., Trackson Bros. Pty. Ltd., Warburton Franki, General Imports Distributors, W.F.S. Electronics Supply, and Mullard-Australia Ltd.

13th NORTH COAST & TABLELANDS (VK2) CONVENTION

The 13th North Coast and Tablelands Convention, held over the Easter week-end, is now a very pleasant memory to all those who attended. Many who have been to past Conventions were on the air from their home stations during the nationally known "Scramble". Doubtless a contact with a portable station at Urunga brought them pleasant memories also, as they remembered the fellowship and fun for which the Convention is famous.

A total of 63 was recorded, composed of 37 licensed Amateurs, 6 associates, and 20 XYLs. Many "harmonics" were present, too, some of whom I can recall growing up over the years to be the modern teenagers that they are today.

The registration list reads as follows: With XYLs—VKs 2WH, 2ASZ, 2ER, 2PM, 2AHH, 2RU, 2PF, 2ACK, 2ACU, 2FP, 2IN, 2JR, 2AHA, 4WS, 2ACQ, 2OE, 2ABP, 2XO and 2NY. Without XYLs—4GG, 2GA, 2GI, 2AEY, 2ZCQ, 2MP, 2AAH, 2ZWC, 2ADV, 2GV, 2XT, 2WQ, 2ASW, 2PY, 2AWG, 2SB, 2ADN, and VS6BE. Associates—Tom Keane, Fred Reid, Norm Moody, Snow McAuley, Dave Harding and Perce Day and his XYL Edna.

The various competition results were as follows: 144 Mc. "warm up" hunt—1st 2XT, 2nd 2ASZ. 7 Mc. hidden tx hunt—1st 2AAH. 144 Mc. hunt—1st 2AHH, 2nd 2RU. "Urunga Scramble"—1st 2ACQ, 2nd 2XT. Ladies' rowing contest—Joyce White (XYL of 2AHA). The contests were all entered into in the true Amateur spirit, and the number of contestants was very gratifying.

Thanks are due to many people for the smooth operation of the Convention. Foremost amongst these are, of course, the organiser, Rod 2ACU and his XYL Betty, together with Crieff 2XO and his XYL Jean. On these people fell the responsibility of ensuring accommodation needs were met with, and entertainments of all types were properly arranged. On behalf of the "boys" and "girls" I thank them sincerely. Rod will be leaving Urunga soon, and his assistance will be sadly missed in 1963, however Crieff has promised to do what he can to assist me with the 1963 Convention.

Unfortunately at every Convention, some have to work and miss the thrill of the contests, however there is great pleasure for the fox, watching the hounds from a vantage point and endeavouring to guess who will "get in".

Brian 2ZCQ and Fred Reid (Assoc.) have once again played their part by hiding one of the 144 Mc. tx's and the 7 Mc. tx. Their skill in making an interesting contest is evident by the fact that out of 10 competitors, only two made it in the 144 Mc. contest, and one in the 7 Mc. contest. Jim 2PM was good enough to hide a 144 Mc. tx to give all North Coast boys —including Brian and Fred—an opportunity to join the hunt. Jim had a cunning plant, as only two out of 10 made the grade. Thanks fellows, for your efforts, you certainly led the boys a chase.

Gordon 2ZWC acted as registration officer as Norm Dash was unable to come. Jack Gerrand and Ted Hamey arranged entertainment and films, for which we sincerely thank them. A lot of other fellows did various jobs which I'm sure all went to make a successful Convention.

Thanks must also go to the citizens of Urunga, the R.S.L. Club and last, but not least, the Urunga Progress Association, who have given sterling assistance over the years. 1963 will see some changes in the Convention. The Progress Association offered to take over some of the organising for they know the difficulties involved if there is not an on-the-spot organiser. Thank you, Urunga, for entertaining us.

The Council of the W.I.A. was represented by the Senior and Junior Vice-Presidents, 2AAH and 2MP respectively. I am sure these chaps were "ear bashed" consistently during the week-end and now have the problem of sorting out not only the desirability but the practicability of various suggestions that were made. In addition, they no doubt received many criticisms to consider.

The success of the "Urunga Scramble" is, of course, due to the support received from home stations. We sincerely thank the various stations who co-operated, particularly the numerous VK4s who participated.

The 1963 Convention will be held during the Easter week-end. New arrangements will be made regarding accommodation, and I hope to have an article published by the Education Officer on h.f. d.f. for the benefit of those interested in 40 mx hunts.

As the organiser for 1963, I would appreciate any suggestions (constructive), etc., from those who attend as to what they would like, as the Convention is for their entertainment.

Thanks to all those who attended the 1962 Convention, including VS6BE who called in whilst en route north.

See you in '63 chaps.

—N. A. Hanson, VK2AHH, Zone Officer, North Coast & Tablelands Zone.

D X

VP4, OA4, BV, ZM7, 7G1, FP, AC5, MP4, ZC6, TY2

Sub Editor: ALAN SHAWSMITH, VK4SS, (Phone 4-6526—7 a.m.-4 p.m.)
35 Whynot St., West End, Brisbane, Qld.
ADDRESS CORRESPONDENCE FOR THIS PAGE DIRECT TO THE SUB EDITOR

This month the 14 Mc. band has been open fairly consistently to Europe via the l.p. through South America, from about 0400 to 0800 hrs. G.M.T. This is pretty well true to form, but by the end of May this path on 14 Mc. should be on the way out.

Both the 40 and 80 metre bands are down somewhat on the previous month or two, and not much of any significance can be heard or worked.

In the mornings around 2000 G.M.T., it would seem that on 7 Mc. the southern VKs can work W on this path. However 14 Mc. is much better at this time with a variety of workable signals from Europe, America and sometimes Central and South America.

21 Mc. around 2200 hrs. G.M.T. has been irregularly letting a few signals through from the West in the form of Central and East Coast Americans.

NEWS AND NOTES

From the Florida DX Report there comes the news of activity from CR10 W stations have claimed to have worked CR10AB, CR10JS on the 14 and 21 Mc. band. QSLs are to go via W7VY. W7VY says, "It's news to me.' (And it sounds phoney to me—Al.)

Did you work Gus W4BPD when he was operating as 3ATBW. By the time this is read he should have completed his expedition to VQ7. (More news on his next moves in the following issue.)

New Prefixes: 7G1 will be changed to 3X. Togo prefix will be changed to 5V should any activity occur from there.

Tibet: AC4NC has been heard and QSOed by several stations. Two frequencies are mentioned. 14048 Kc. at 1600 and 14004 Kc. at 2200z. Beam headings seem to be correct, however so far we have no knowledge whether this station is OK and QSLs. AC4NC's being legitimate is doubtful. VU2MD says AC3NC is still in Sikkim and has been inactive for a couple of years. Also AC4AX last reported he saw no prospect of Tibet activity in the foreseeable future. K2GFQ reports AC4NC on 14052 at 1753z on Feb. 23. Frank Lucas, W3CRA, says he heard AC4NC coming through over Northern Europe from 2000-2100.

Danny's next stop will be one of the isles Starbuck, Flint, Vostok or Malden. They stand a better chance for separate D.X.C.C. status than the Marquesas. On c.w., Danny mostly operates on 14065 Kc. usually between 2300-0100z; on s.s.b./a.m. the freq. is 14195 Kc. usually between 0100-0300z. Next stop will be the Manihiki group and then on to KS6. From there it's an easy jump to Apia in the new Samoan Republic should there be a chance that this nation could count as "separate". At this time decisions will be made for next stops which could include the Tokelau's, Wallis Isl., Tonga, etc.

Cocos Keeling, VK9LA, active around 1430-1530z, crystal controlled on 14017 Kc. with 20w.

Neutral Zone Palestine. W2CTN has just received a letter from 5N2KHK/ZD2KHK/NC. He is now about to come on the air as ZC-6UNJ. W2CTN will be handling the QSL chores. This is the U.N. Zone between Israel and Jordan.

9A1FQ gives his QTH as San Marino. He is probably phoney as legit stations are still using the MI prefix.

How's your c.w. operating ability. KV4AA, Dick Spenceley, is searching for a really good man to handle a DX-pedition into TR8, TL8, TY2, and 5V, etc.

(All the above news supplied by Florida DX Report. Editor W4CKB.)

Bill VK3AHO writes concerning his forthcoming expedition to Wallis Island. Bill will leave Noumea in company with FK8AS during the first week of June 1962. Operation will be a.m. and c.w. by FK8AS and s.s.b. and c.w. by VK3AHO. Call used will be VK3AHO/FW8. QSLs are to go via W4ANE, but the handler for the VK QSLs is yet to be appointed. Frequencies are to be announced soon. Bill is a keen 80 and 40 metre man and will work those bands as long as conditions are favourable. (Please keep me posted Bill.)

Steve VK0VK is now home from the stormy seas and the wintry Antarctic wastes. But not for long. Before you read this he may be on his way to the States, where after a short stay he will be returning to the Antarctica where he promises Ham activity during 1963 with s.s.b. included. (More details later.)

CR4AR seems to be active on the 14 Mc. band on c.w. round 2030z, but difficult to reach because of the long European line-up.

Walter Plant, VQ4FO, is migrating to Australia to settle in Brisbane, in July. (Let's give him the Aussie welcome.)

Bro. Kinsella, VK3AXK, reports that there is a fair bit of good DX to be had on s.s.b. 40 mx at night our time. There's lots of Ws who have two and three element beams and S9 sigs to match. JAs are active and a few South Americans are being wkd. Best time for the latter should be around 1100 hrs. G.M.T.

Troubles and Danny Weil. The "Yasme" needs a new crankshaft. If he escapes the nuclear explosions, the next port-o-call is to be Flint Is. (VK3TL.)

ACTIVITIES

Frank VK2QL landed a nice one or two these past few weeks. 7 Mc. wkd.: CX2BT, KV4CI, XE1OK, CT2AI (0800z); 14 Mc. wkd.: DL9VZ/SV0, Rhode Is. VP2MV, CO7HQ, CO7AH, VP-5MJ, VQ9A, VQ9HB, K3GAD/KJ6, 3A2BW, AP5CP, VU2US/AC5. QSLs recd. were HV-1CN, UA1KED, VQ5IB, UL7FA, HR2FG, LX-3EQ, KR8AP, YJ1MA, YS1O, CP5EZ, VP5BL/5, EL4A, VR1M, 5A3BC, KV4CI, VP5BH, VU-2NRM.

Bud VK2AQJ also has found conditions to his liking and has included some good ones in the following, all on 14 Mc. s.s.b. KR6BA, KA2AO, UA0VQ, KG1BO, K3GAD/KJ6, KJ6CA, VS1AU, KA2JL, KA2MM, KX6DB, G8PO, W4ANE, KH6AHQ, W8OUH, W4FGU, K6CFV, W3JW. Also Ws on 7 Mc.

Let me welcome to this column Bro. Kinsella, VK2AXK, who reports a good s.s.b. list. 14 Mc.: DJ1IM, LA4TE, VE7ANR, K4WHD, W4SZZ, W7PRY, PZ1AX, OA4EA, KX6BU, KX6BQ, GI3JIM, G3JAF, DJ4WN, YN1BH, CN8FU, KB6BR, YV1EE, YV1EL, YV1DH, YV-5AEC, SV0WT, ZE1JE, TG9AD, 4X4OC, VR1G, VP2DA; 14 Mc. c.w.: F3DM, EI9Y, HB9KB, SM7WT, PY5ASN.

Don L2022 has not been listening much but sends in these. 7 Mc. c.w.: DJ2BZ, UB5AU, DJ6RX, UR2CS, UA1KAG and others. 14 Mc.: JT1KAA, UL7KCF, KG6AKZ, FO8AN, VR2AB, UO5GN, HB9ABM, YO8RL, OX3DL, OK1GT, OZ9AM, 4X4NK, EA6CF, F3EG, EI9YC, HP1IF, UI8KBA, SV0RU, KP4BEA, VP2VS, SM5HT. 14 Mc. s.s.b.: SM6SA, DL1SD, LZ1HA, 5U7AX, G3AWZ, DJ4WN, KR6BH, CT1IP, UL7FB, UA-1KAR, YV5AKU. 21 Mc. c.w.: KR6DL, K0BHM, JA1CGX, 4X4DK. 21 Mc. a.m.: VR2ED, VK-9DG, W5SMK.

Chas L2211 sends in the following logged all on 14 Mc. between 1300-2300 hrs. E.A.S.T. A.m.: PY1CBS, TI2PJ, TI2JCL, HM1AE, UA9KOG, KC4USH, GD3OCD. PY3KG, YV1EQ, OA4GI, I1TGU, VE1EI, F9QU. XE1CE, CE2DB, CN2BK, etc. S.s.b.: KZ5CG, VE1AGI, GI6TK, XW8AS, KV4AA, FK8AC, FO8AN, OX3KC, OX3BZ, VS6AQ, VQ4RF, KX6AE, KP4AZN, VU2NR, MP4BBW, KP4CK, I1ANY, UB5VW, DL3WUU, PZ1CV, DU1AN, PY2AIE, TI3CB and others.

David VK3QV reports wkg. the following on 28 Mc. a.m.: CO2CT, JA4OI, UA0LBQ, UA-0KUE, VS6EC, VU2RC, ZE2JF, ZS6AGH, 9M2AD and several others. Heard KR6GX, HR1SO, JA7CD, 4S7YL and lots of Ws, VEs, etc. David predicts that the 10 mx band will get worse before it starts to improve around 1965 or 1966.

Ken VK3TL found the 80 mx band very good this past month, especially in the late afternoons when Europe was easily workable. He wkd. on 14 Mc. c.w.: CN2AQ, CT2AI, DL-1XZ, DM2BTO, F9TE, G2VV (and a dozen other Gs), GD6UW, GM3LYI, GW3KSQ, GW-5TW, LA5VH, OH7HI, OK1DT, OK1UQ, ON4FL, PI1KMA, SM3BBA, UO5AA, UC2KAB, VP5MJ, XE1OK, YO2KAC, YU2HA, YV5ACP, ZB1CR; 14 Mc. a.m.: FO8AN, HL9KT, HM4AQ, KV4AA, MP4BBW, XW8AS, XZ2SY, YV1EL, BV1US, TI2CHV, K3GAD/KJ6, ZS5BY, ZS1JA and lots of Europeans; 21 Mc. a.m.: ZS1CD, ZS1CG. QSLs recd. were ON4EC, OZ7UU, K6CQV/KS6, HC1FX, OH3TQ, KC4USE, VS4RM, VS6EM, 9M2UF, CT2AI, etc. (Hope the triband beam out does the quad, Ken, OM.)

Bill VK3AHO also hands in a nice s.s.b. list. 3.5 Mc.: FK8AU, VE3BWY; 7 Mc.: VE1BC, VE3BWY and many Ws; 14 Mc.: FK8AC, FK-8AZ, UA3CR/UA1 (Franz Josef), SM7XA, ZB-2AD, SV0WT (Crete), 5U7AH, EA9AZ, OH2NB, ON4DM, GD3GMH, VR1G, VP2MC, UL7HB and others; 21 Mc.: ZS4LT, ZS4FP, ZS4LB, ZS-1CG, ZS1SA, ZS1RD, XW8AS, 9M2CR, VS6CL.

Eric BERS-195 reports these loggings heard, 40 mx: EI2AG, LZ1KPZ, SP7LA, UA2AF, UA-3KQB, UB5KST, ZK1BV, YU2ARS, G5GH, SM5BTY, LZ2KBA, LA2HC, UW0CB, UA0FF, UA0EV, SM5CXF, UB5KED; 20 mx: VU2US/AC5, BV1USA, CX2BT, FO8AN, GD6UW, HM-4AQ, HM1AP, KR6AM, LU3ZF, TI2LA, UD6BE, UP2AY, VK8NK, VS6DS, YS1O, 4S7NE, BY-1PK (1330z). QSLs recd. were JT1KAA, OH-3WM (3.5), VE3BQL, UA2AW, UC2KAA, UI8LB, YK1AK, etc.

Ian VK3ZHR reports having heard the following. 14 Mc. a.m.: HC2HT, VE7AKD, F3PL, I1KP, G2BAT, VS1FZ, G3AMM, G3OQO, DU-9VVL, DU9FC, KM6CE,, KC6BI, YV2CJ, VR-2AB., ZK1AR, OA4GI, VS1GE, VR3B, DU1AN, VE3CAP, YV3BW, TG9ER, KZ5MA, CT1SQ, TG9BM, W1YRM/VE8, VR1G, YN1ST, F9BE, CN2BK, GW3EQL, VP1WS, etc.; 14 Mc. s.s.b.: VE7BCM, SM3BIZ, UA0KAR, GM3JDW, VU-2NR, LA5LG, KR6LY, YV1EL, KX6AE, UW-9CC, CR9AH, KA8AA, FO8AN, TI2HP, VR1G, FK8AC, and others.

Hal VK4DO reports the l.p. on 14 Mc. good most days. The best wkd. were DJ7IK, CT1VB, F8VN, F3NB, FO8AN, G3HDA, OE5LX, OH2IJ, SP5ADZ, ON4FL, SM6UG, UQ2KAN, YV5DH, UO5GW, 4S7NE, etc. Best ones heard on 14 Mc. c.w. were CP5EZ, LZ1KSP, OE3WH, PY-2CD, W6GMQ/VR3, YV5AE, UL7KBB, HA5BI, HB9SL, JT1KAA, etc. 20 mx a.m. wkd. VK-9RH, I1AHL. 21 Mc. c.w. wkd. 4S7NE, OK-1GT and Ws.

Ted VK5JE, who has now achieved his 100 countries wkd. on 7 Mc., comes up with this very fine list, all c.w. G5WP, HP1IE, PA0OU, CR9AH, KC6CD, KC6BB, 5N2LKZ, 5H3HD, HS1X, KR6LJ, 9M2FR, VS4RS, VR4CV, HM4AQ, SM3CUN, UA9KFG, YJ1MA, YV2BJ, VR2DK, VK9RO, ZK1AR, ZE3JJ, ZS6BBK, and many others. (Nice going OM.)

George VK5RX wkd. these: KH0AB (0245z), JT1KAA (0950), VU2US/AC5 (1400), VP7NQ (0610z), CO7AH (0620), KZ5TD (0700), KL7DND (0816z) Sitkinak Is., EA1BC (0855z), IT1AGA (1540), PY1HQ (1000z), DL9KP (1518z). (Congrats on W3BZ—1st VK).

Peter Drew, L6021, has had his ear on the job. He heard 40 mx s.s.b.: W4MZK, JA1AEA, KG6FAE, ZL3LE, W4TUT, K7DHE; 20 mx a.m.: 9M2RI, VK9RO, ZS5JY, ZE7JR, F2UP, VU2PP, F8XT, VE2AUH, ZS2OP, KA2JA, XZ2VK, KR6IW, VK0JM, HL9KK, CN8CS, GW3EQL, ZE2JA, VK9YT, ZS6AGU, ZS4JO, ZS2DY, ZS-6AMH; 20 mx s.s.b.: KA2YA, XW8AS, UI8AJ, VU2NR, UA4KED, KG6NAB, CR7CI, ZS6AE, DU1GF, UA1DZ, SM5BLA, 4X4DK, XT2Z, M1SVZ, HH2P, KR6MH, HM4AQ, CE5EF, KC-4AQQ, YV1EE, CN8FU, VE3GO, MP4BBW, XF1CV, KZ5LC, ZS6ANE, G6TC, YN1BE, OA-4EY, XE2LV, YV1EJ, HK9KP and many, many others.

My thanks to the above chaps who take the time each month to help this column along with relevant bits of info. You can help me further fellows by including all news you may come across regarding Oceania activities.—Al.

ADDRESSES

JT1KAA—Box 639, Ulan Blator, Mongolia (or Box 88, Moscow).
VE3BQL/SU—W/O E. C. Veale, 56 C.D.N. Sqdn., U.N.E.F. Base P.O., Beirut, Lebanon.
YK1AK—Talma Jibway, 29 Omar Mokhtar St., Damascus, Syria.
HK3AH O. Luhrs, A.P.T. Nacoinal 1505, Bogota, Colombia.
KR8AP—Toshio Kuba, Kinjo, Shuri, Naha, Okinawa.
4S7YL—QSL via KH6BPF for YL Asian confirmation.
VP2LD Steve De Lima, via Jack Cummings, W2CTN, Amityville, New York.
VP2MV—C/o. Cable and Wireless, Montserrat, B.W.I.
VP2SH R. Nelson, Dept. of Agriculture, St. Vincent, B.W.I.
VP2DX—W8VDJ.
9K2AM—Via W3KVQ.
ZB2AD—W2AYD.
VP8GB—Via W5QK.
VP5CW—903 E 7th Street, Panama City, Florida (W4PAA).
VQ1CJ—Box 1283, Zanzibar.
9G1DT—Via W4HUE.
ZC6UNJ Via W2CTN, Amityville, New York.
CR9AH—Via W7ZAS.

(Continued on Page 21)

STEP-DOWN TRANSFORMERS

for a host of applications!

ELECTRONIC A & R EQUIPMENT

RADIOS

TAPE RECORDERS

SHAVERS

HEATING BLANKETS

PROJECTORS

TV PICTURE TUBE BOOSTERS

VALVE FILAMENTS & HEATERS

SOLDERING IRONS

BATTERY CHARGERS

PILOT & SAFETY LIGHTS

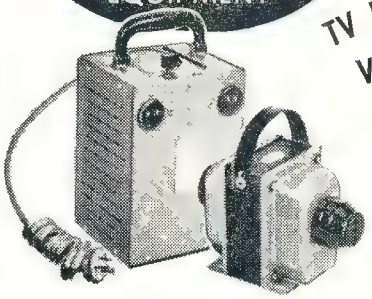

The newest and latest addition to the already comprehensive range of A & R Transformers. Data sheets listing all types are now available from **"The Transformer People."**

Send for Specification Sheet and Price List NOW!

A & R ELECTRONIC EQUIPMENT CO.

PTY. LTD.

46 LEXTON RD., BOX HILL, E.11, VIC. P.O. BOX 9

POST THIS COUPON

NAME.....

ADDRESS.....STATE.....

TYPE 65

General purpose with low frequency response suitable for lively halls.

TYPE 66

P.A. use where less low frequencies are required than the 65 with a lift in the middle frequency to ensure high output without feedback.

TYPE 67

Communication use, has a further reduction in low frequencies than the 66 and increase in high frequencies for intelligibility through noise.

THREE INDIVIDUAL TYPES IN THE FAMILIAR "65" CASE

★

Available in Low (M.D.) 50 ohms, and High (M.A.) Grid Impedance.

★

Retail Price including Sales Tax

Type	65 MA	£11/0/7
„	65 MD	£8/19/0
„	66 MA	£11/3/6
„	66 MD	£9/3/0
„	67 MA	£11/3/6
„	67 MD	£9/3/0

ZEPHYR PRODUCTS PTY. LTD.

58 HIGH STREET, GLEN IRIS, S.E.6, VICTORIA **PHONES: BL 1300, BL 4556**

S W L

OH0, KL7, ZD8, ON4, LZ, FF8, VP8, XW8, 5H3, W0

Sub Editor: ROBERT YOUNG, WIA-L3076,
14 Alverna Grove, Brighton, Victoria
ADDRESS CORRESPONDENCE FOR THIS PAGE DIRECT TO THE SUB EDITOR

VICTORIA

Last general meeting of the Group, 19 members attended—the biggest roll-up we have seen for some time. Owing to Mac Hilliard being absent, Noel Harrison took the President's chair. A small amount of general business was discussed, then the band reports from Maurie. 10 mx was open to W land, KH6 and JA from 1000 hrs. till 1400 hrs. (E.S.T.), 15 mx open to Ws around midday and to South Africa around 1600 hrs. The remainder of the evening was devoted to Keith 3YQ who showed us some very interesting colour slides that were taken on tour of Japan. Judging by the applause given after the show, all members, including myself, enjoyed the slides very much.

Noel L3101 hopes this coming winter to increase his score. He has recently renewed all the feed lines on the three antennae to 300 ohm open line. This has made quite a noticeable difference, especially on the W8JK, it being extremely directional and has cut the noise down quite a lot. Last month Noel heard two new stations in Alaska, they were KL7EEX and KL7EEM, running 5 x 8-9. These two Amateurs have only been in Alaska a fortnight and are looking for reports.

Ian L3065/3ZHR has been busy over the past few weeks and has not been able to do very much listening on the s.w. bands, but on a few occasions he has turned the gear on the conditions have been next to lousy. The DX total is slowly improving and a few cards have been sent out of late and is now waiting for a few returns. Ian has got his stereo equipment more or less in working order and is very pleased with the results. The only trouble is a 50 cycle hum from the motor is heard when the volume is increased to a high level. The stereo unit has built-in radio tuners covering the b.c. and s.w. bands, and also the f.m. band.

Maurie L3055 has his HRO finally aligned to perfection on 20, 15 and 10 mx and at this point I will suggest a word of warning to the effect of "unauthorised persons prohibited to touch!" hi. A 20 mx doublet was installed by Maurie and it works quite well, but a high noise level is received with the signal, so he says he will never dispose of his 20 mx vee beam. Cards received, on 20 mx s.s.b. YU2DB, also another one from YU2DB on 20 mx a.m., O28SS, YO3GK.

Ian L3006/3ZBI hoped to have his 2 mx gear operating mobile during the Easter holidays but due to his g.d.o. not being calibrated up to 2 mx, the project was not completed. However the 6 mx gear was installed in the car and was used over the Easter period.

Talking about v.h.f. equipment, yours truly is still having trouble with a xtal locked 2 mx converter, the problem was the xtal was not oscillating on its third overtone. However, after tuning the coil and testing the xtal it refused to function, so after finding no h.t. on the osc. tube and the feed back winding connected the wrong way, proceded to correct it. It now oscillates on its third overtone but now will not multiply to the correct frequency. However I hope to get it operating some day. At the moment a 12 element 2 mx beam is sitting 20 ft. in the air doing nothing.

PARTICIPATION IN CONTESTS

Have received a letter from Eric Trebilcock which has brought to my notice the very small number of entries in various contests. The letter is as follows:—

Dear OM, I feel I must write you a few lines regarding participation in the **1962 VK/ZL DX Contest by the VK3 S.w.l.** I am obliged to do this, after seeing the 1961 VK/ZL DX Contest (Rx Section) results, and bearing in mind the VK3 S.w.l. effort in the 1961 R.D. Contest. In the R.D. Contest 13 VK3 S.w.l's. submitted entries and in the VK/ZL DX Contest only myself saw fit to submit an entry. Why the lack of entries in the latter event? I am puzzled.

I **purposely** did not take part in the Phone section of the VK/ZL DX Contest (1961)—my "score" is for c.w. only. Apparently my intentions in not entering the Phone section, **in order to give my less experienced fellow S.w.l's. in this Division "a bit of an open go"**, were all in vain! (If the published results mean anything.) I would like to see a change in attitude towards the VK/ZL DX Contest 1962, by the S.w.l. of this Division (who proved in the 1961 R.D. Contest that they are not completely ignorant of what's required of a contest competition).

I therefore state:—

(1) I will **not** submit an entry containing **phone** loggings for the 1962 VK/ZL Contest (as in 1961).

(2) I will offer 20/- and 10/- cash prizes to the two leading S.w.l. (VK3) **other** than myself (**if** I happen to be in the leading section of this Division) in the 1962 VK/ZL DX Contest, **provided at least five of my fellow VK3 S.w.l's. submit entries** in this event. (I emphasise the bold type because the whole objective of mine in writing this letter is to get the S.w.l. **interested before** it is too late—the day may come when the S.w.l. section of the Contest will be deleted!)

Would you be good enough to give publicity to the above in any manner you may see fit —between now and the time of the event (around late Sept., early Oct.). At the same time it is not too early to draw the membership's attention to the 1962 **R.D. Contest** in August. **We** want to **beat** VK2 S.w.l's. this year as they **just** pipped us in 1961 (14 entries —average 331 points as against our 13 entries average 330 points).

Thanking you in anticipation,

(Signed) Eric Trebilcock, L3042.

Need any more be said?

VISITS

The second visit for the year at the Rockbank Receiving Station was attended by 13 members. The personnel demonstrated triple diversity reception on overseas circuits using frequency shift keying and teleprinters. It appears that the triple diversity reception is accomplished by having three rx's tuned to the one frequency and each being fed with an independent rhombic antenna being spaced a wavelength away from each other. When the signal fades on one rx it stays constant on one or two of the other rx's, which in result would minimise fading to a great extent and a constant signal level would be maintained. Also demonstrated was a Collins R-391/URR rx which was opened up for us to look inside. The rx was permeability tuned with six i.f. stages. The cost of the Collins was thought to be around the 1,000 db. mark.

The next visit will take place on June 1 and will be to Diggers Rest tx station at 8.30 p.m. On July 6 a visit has been arranged to the Moorabbin Radio Club at 8 p.m. Persons requiring transport for the above visits meet at 478 Victoria Parade one hour before the stated time of the visits.

TASMANIA

Neville L7013/7ZEE states that activities are very quiet but has written to let the other States know that VK7 S.w.l.'s still exist. Nev. has been hearing some good DX on 14 Mc. s.s.b. but is not keeping his log up to date. At the moment v.h.f. is taking up most of his time.

RADIO MAIL

I wish to thank the following listeners for their letters: Don Grantley, Eric Trebilcock, Doug Richardson and Peter Drew.

Eric Trebilcock: QSL cards recently to hand include JT1KAA, VE3BQL/SU, UA2AW, ZK-1AK, JA1AXV/MM, OZ4IP/MM. Eric has mailed 382 reports for 1962 and has received 183 QSLs from 61 countries, 13 zones. Also heard 110 countries 33 zones (1962). Ionospheric conditions very much unpredictable. In any case, good conditions are very short-lived, and in the main if one wants to be in on what's going on there is only one thing to do—and that is **be around at the right time.**

Doug L2047 has been listening on the DX bands to date. He has heard 21 zones, 46 countries—all on phone, with 10 countries and 4 zones confirmed. Doug uses a 4-valve d.w. bandspread superhet rx. He says the 14 Mc. band is open to Northern States between 1500-1900 E.S.T. Doug has had a fair bit of time to listen due to having a broken leg, probably caused by putting up that quad, hi, which will be up in the air very shortly.

Peter L6021 reports that conditions have been quite good on 20 mx in the afternoon. He has been hearing North, South and Central America and in the early evenings ZS, KR6, VU, ZE, W and a couple of other occasional blow-ins. Also heard were Europeans in the afternoons, but were at a weak strength. 40 mx has been very good to W land between 0800-1000, especially on a.m. 80 mx has been good for locals, Eastern States and ZLs, but nothing else.

Now a few words from Don L2022. He finds conditions for DX at his QTH have been on the improve of late. 20 mx has been wide open for the past three days to all parts of the globe, whilst 15 has had several good openings. However, the most pleasing feature was to have a good opening to the States on ten last week. Reception was possible for only approx. half an hour, but it was really fine while it lasted.

He has just returned from a trip to Sydney via Jervis Bay, during which time a short visit was made to the VK2 rooms at Crows Nest. Prevailing circumstances made it impossible to stay more than a few moments, in which time he met Barney Smythe, Tony Patterson and renewed acquaintances with Tim VK2ZTM. The rooms are a credit to the Division, and no small measure of the work has been, and is being, done by the S.w.l. Group. Barney Smythe, who, like Don, is a P.M.G. type, has held office in the S.w.l. Group for several years in various capacities. This year he is assistant secretary of the VK2 Divisional Group Disposal Committee, also Council liaison officer, vice-president and QSL officer to the S.w.l. Group. The Group is also represented in Divisional activities by Tony Patterson, who as treasurer of the S.w.l. Group, holds office as Bulletin editor for the Division and is manager of the clubrooms.

DX: JT1KAA is still going strong. Don't pass over UA1KED as being just one of the huge numbers of Russians. He is on Franz Josef and is a separate country. Heard in Albury normally in the mid evenings on 14 c.w. Note 5U7AX is on 14 s.s.b.

Well, chaps, that's all we have for this month. 73, and best of DX, Robert L3076.

DX LADDER FOR JUNE 1962

	Countries Conf.	Countries Hrd.	Zns. Conf.	S.s.b. Conf.	S.s.b. Hrd.	W Stat.
E. Trebilcock	277	282	40	—	—	5
D. Grantley	101	249	37	14	90	34
A. Wescott	84	159	31	33	92	—
M. Hilliard	67	208	33	5	100	11
M. Cox	46	211	25	11	122	14
C. Aberneathy	32	71	22	—	—	13
N. Harrison	32	55	23	—	—	24
P. Drew	31	176	18	7	87	4
P. Fields	26	133	—	—	—	—
I. Thomas	17	133	16	6	79	8
D. Jenkins	10	141	7	—	—	—
H. Burger	6	185	5	1	19	—

'REPLOGLE' 12" Ham Globes
Prefix Letters of every Country clearly marked.
PRICE £9/7/6 (Freight Paid)
WM. WILLIS & Co. Pty. Ltd.
428 ELIZABETH ST., MELBOURNE, VIC.
Phone 34-6539

W.I.A. 50 Mc. W.A.S.

Call	Cer. No.	Add. Cntr.	Call	Cer. No.	Add. Cntr.
VK4HD ..	27	8	VK4PU ..	35	4
VK4ZAZ	26	7	VK4HR ..	4	3
VK4ZBE	29	6	VK3PG ..	5	3
VK2WJ ..	13	4	VK2ABC	8	3
VK3ZFM	22	4	VK2VW ..	9	3
VK3IM ..	30	4	VK5GG ..	19	3
New Members:					
VK5BQ ..	23	3	VK3ZGZ	28	2
VK7LZ ..	24	3	VK5ZZ/T	31	2
VK3ZHF	25	3	VK7ZAO	33	2
VK9AU ..	32	3	VK7ZAQ	34	1

VHF

50 – 144 – 288 – 576 – 1296 Mc.

Sub Editor: BILL ROPER, VK3ARZ,
Lot 59, Orchard Street, Mount Waverley, Victoria
ADDRESS CORRESPONDENCE FOR THIS PAGE DIRECT TO THE SUB EDITOR

By the time you read these notes it is quite possible that Oscar II. will be in orbit. If so, times to listen for it will be available from your State Co-ordinator.

Oscar I. was an excellent opportunity for Amateurs, particularly v.h.f. types, to justify their existence and put their skill and equipment to good use.

A lot of excited talking took place when the satellite was in orbit and some even bothered to track it and make recordings, but only four Amateurs in the whole of Australia bothered to submit their reports to the proper authority. Why?

All that is past history now, best forgotten in a hurry. What matters now is that here is another opportunity, and this time there can be no excuses.

Everybody who has two metres receiving equipment is urged to listen around 145 Mc. and log Oscar II. as often as possible. But do not stop there—send in some sort of report, either your own QSL card or one of the standard report forms available from your State Co-ordinator.

Keep this following fact in mind. Whether an Oscar III. **Communications** satellite is ever launched, depends on the support YOU give to Oscar II.

Send all reports to P.O. Box 183, Sunnyvale, California, U.S.A.

NEW SOUTH WALES

At the April meeting of the V.h.f. Group the Management Committee for the ensuing year was elected as follows: Chairman, Tim 2ZTM; Vice-Chairman, Phil 2ZBX; Secretary, Bob 2ASZ; Committee, Barry 2ZAH, Reg 2ZCK, and Basil 2ZLB. The lecture was given by Keith 2BK on s.s.b. and great interest was shown in the partially completed 2 mx s.s.b. tx on display.

50 Mc.: The only breakthrough in April occurred on Anzac Day to VK5. Apart from this, 50 Mc. has been quiet with only night local activity.

144 Mc.: Band usage has been high with many field stations active over Anzac week-end. 2ZRG/M, at Bathurst; 2ZVL/M Newnes Junction; 2ZPJ/P, Orange; 2ZRU/M at Laggan, between Bathurst and Goulburn; also 2DR at Mt. Porcupine. Signals were varying between S5 and S9 plus.

2ZGM, with s.s.b. at Ungarie, has been working 2RX over a 250-mile path, but has moved to Wyong at Easter and is not active at this time. Good signals are heard from Newcastle and Wollongong stations quite reguarly. 1VP in Canberra has been worked by 2ZRH and 2ZQX with signals varying from nothing to 5 and 7.

576 Mc.: Interest high, with the following stations active: 2HL, 2ZAC, 2ZAH, 2ZBJ, 2ZCF, 2AWZ, and 2QZ.—Basil 2ZLB.

VICTORIA

50 Mc.: At last! Jim 3AZY at Frankston worked JA4NA on Thursday, 3rd May, at 1800 E.A.S.T. Nice work Jim. Ian 3ZMH at Queenscliff is now on 6 mx, running 60w. to an 815, while Ray 3ZDE at Reservoir has come up with 35w. input to an 832A to a four element yagi, 36 ft. up.

144 Mc.: This month a swag of newcomers have appeared on the band. Alan 3ZNG at Preston runs 15w. to a 522, R. & H. converter. Bob 3ZIU at Carlton runs 18w. input to a 3/12 to a six el. yagi. Alan 3AZD at Lilydale is another, complete with built-in attenuator. Because of a large amount of earth between Alan and the city, he has to bounce the signals off Mt. Dandenong. One for the DX hounds is Bill 3XE at Hexham, on 144.38 Mc.

Field Days: The results of the '61-62 field day series show a win for 3ZLT with 223 points. Des 3YA was runner-up with a fine effort of 184 points, while the group station, 3ZGP, 3ZMR, 3ZAI and 3ZAN totted up 174 points for third place. The series generally were not as well patronised as expected. Due to this, it is proposed to run three field days only next season. These are expected to take place in October, December and February, the latter to coincide with the National Field Day. It is hoped to secure the co-operation of other States in arriving at the date of at least the December day to take the fullest advantage of the conditions generally experienced at this time. For many years field days have been scattered about all over the calendar when, with a little bit of thought, at least some States could co-ordinate their efforts. The results should be well worthwhile.

V.h.f. Group Meetings: The April meeting was attended by 28 members. Various aspects of field days, scrambles and other activities occupied the early part of the evening. Jim 3ZGG was the main attraction of the evening with a talk on his recent trip to America. Color slides and exhibits illustrated the fun Jim must have had poking around their Ham stores.

Project Oscar: Bill 3ABP at Altona has beem appointed VK3 co-ordinator for Project Oscar. If you want information on the project, give Bill a call.

General: Gus 3ZIC has tendered his resignation, due to his forthcoming trip to VK4; best of luck, Gus. Activity on the bands has been relatively low of late, the colder weather driving everybody in to their "one-eyed monsters". How about spending just one night a week keeping the cobwebs out of the gear?—3ZLT.

QUEENSLAND

Interesting DX openings on 6 mx this month. JAs were coming in regularly, but weakly, during the first three weeks of April; almost daily, in fact, about mid afternoon. Other things heard regularly on the band were the Russian t.v. station earlier in the month and for the latter half, those strange double carriers coming from the direction of North East.

The W.I.A. Convention was held at Alexandra Headlands the week-end before Easter. V.h.f. types were well represented and set up a 75w. base station from untried assemblies supplied by different Amateurs. The tx was switched on, a few minor adjustments made, and the v.h.f. base station functioned perfectly.

On the Easter week-end v.h.f. Amateurs performed a magnificent service to the public by providing communications for a Scout venture, which took the form of a trek from Toowoomba to Lockyer. The communications were required to check the arrival or otherwise of the different patrols through various control points. Communications were later described by Scouting officials as the best effort. Organiser of the v.h.f. side was Mick 4ZAA, and those who took part were 4BZ (base station), 4ZAW, 4ZBA, 4ZBH, 4ZEL, 4ZEK, 4ZBL, 4RX, 4ZKH and 4CP.

The April 2 mx hidden tx hunt was organised by 4ZNS, who hid it so thoroughly that no one was able to find it without opening envelopes.

Newcomer to the Channel 0 band is David 4ZEK who is using a dipole which is working reasonably well; welcome to the band David. 4ZBZ, possibly spurred on by news of oil strikes, is extending his tower to great heights. He maintains that its purpose is to improve reception, but it looks like a drilling rig to most of us. 4ZBT.

SOUTH AUSTRALIA

50 Mc.: With the exception of a Sporadic E opening on Anzac Day, this band has been very quiet. During the opening several VK2s were worked at great strength, some of them running very low power (10-15w.).

The opening lasted for two or three hours and provided first DX for a number of Adelaide newcomers. Over the Easter period Vic 5JH went for an extended portable trip and worked back into Adelaide from numerous locations up to 150 miles away at good strength. Quite an excellent effort for 6w. Vic is thinking of building a 2 mx portable.

A few newcomers on 50 Mc. include Luke 5LL (my goodness) and George 5ZGY, also Ken 5AL.

144 Mc.: This band has been quite active with one or two licensees appearing straight on 144 without a 50 Mc. debut. This is unusual. Such gentlemen include Bob 5ZHR and Chris 5ZMS. These two chaps are running 20-30w. but as yet have no gear on 50 Mc. Much more activity on 50, chaps!

The nightly skeds between 3NN and 5ZDR have recently ceased, owing to Mick doing work in the country. Mick hopes to be finished soon, then the skeds will probably resume.

288 Mc.: This band has not been very active recently. There have been a couple of newcomers, however, and these include 5ZEO and 5ZEQ. John 5ZDZ is still waiting for more stabilised activity on 288 Mc.

General: General alarm has been shown in VK5 at the prospect of Channel 0 being allocated in other States. If we in VK5 can do anything to assist other Groups in taking action regarding this absurd allocation, they should contact us immediately.

Interest in Oscar II. is high and although the launch time is uncertain, several VK5 stations will be listening with interest.

Congratulations go to Mick 5ZDR being placed outright winner in the 1961-62 Ross Hull Contest. This is the first time a VK5 has been outright winner. 5ZCR.

WESTERN AUSTRALIA

April Meeting: 30 members and visitors attended this meeting; six new members were welcomed. Those with call signs were Tom 6KS/T, Brian 6ZDE, Roger 6ZDI and Bob 6ZDP. Brian and George, the other two members, both sat for the L.A.O.C.P. at the last exam.

New Stations on v.h.f.: Tom 6KS/T, Brian 6ZDE, Roger 6ZDI, Bob 6ZDP and Tony 6ZDT were heard this month; welcome to the v.h.f. bands boys and we hope to hear more of you. Arthur 6ZBE, from Greenmount, has been quite active after an extended absence from these bands.

Fox Hunt: John 6ZAG hid the tx. Michael 3ZEO and Pierce 2APQ went with Alyn 6ZDM and were narrowly beaten into 3rd place by Wally 6ZAA (the winner) and Roy 6RY. Mac 6MM will be the next fox.

50 Mc.: Activity on this band has increased. Reports of DX have been received from Brian 6VV and Mick 6ZBP in Geraldton and Derby. They have been regularly working JAs and are envied by the boys further south. Bob 6BE and Wally 6ZAA both worked Brian 6VV on the 320-mile nth.-sth. path during the month and have been watching the weather charts diligently. Noel 6ZBG has logged signals from the Russian t.v. station again this month.

8AU in Darwin is beaming towards Perth on 50.4 Mc. every night at 1930 to 1945 W.A.S.T. He runs 130w. to an 8 el. yagi. He listens from 1945 to 2000. He has a link with Roy 6RY each Sunday at 1720 hrs. on 14 Mc.; any reports of hearing his signals should be passed to Roy.

6ZAL in Bunbury transmits to Perth every second Sunday at 1000, commencing 6/5/62. Both he and 6JG have heard Perth signals but no contacts to date.

Clem 6CW and Clarry 6CL in Wyalkatchem and Miling are conducting crossband checks on 50 and 3.5 Mc. Clem 6CW has heard Len 6ZCS in Perth, no audio was there but the r.f. got through. Tom 6KS/T has been putting a potent signal around Perth. He hetrodynes his 14 meg. exciter onto 50 megs. s.s.b. He has a 640 linear working and is expected to also use this mode of operation on 144 Mc.

144 Mc.: Most activity on this band has been with crossband contacts 144-50 Mc. We hope this will lead to more usage of 144. 6AF, the R.A.A.F. Pearce Radio Club, has been revived and is using this band. Arthur 6ZBE has reported the construction of a new tx using a 640 in the final. Get to it boys, see you on 2!

288 Mc. is dormant at the moment, the main exponents are experimenting on 576 and 1215.

576 Mc.: Wally 6ZAA and Charlie 6ZCE went to the 44-mile peg at North Dandelup with xtal locked gear. They established contact with Rod 6ZDS on 50 Mc. but no joy on 576. They are continuing with their efforts.

1215 Mc.: Rod 6ZDS and Wally 6ZAA have established one-way contacts. There is some confusion to the unit of length in the distance. It is rumoured it is either 6-8 miles on 6-8 feet, we hope for the former, but suspect the latter. Both Rod's and Wally's gear is xtal locked.

Slow Morse: Mac 6MM and Roy 6RY are continuing with slow morse. The time is unchanged, being 2000 to 2030 hrs. The days are Sunday and Tuesday (Mac), and Thursday and Friday (Roy).—6ZDM.

TASMANIA

I regret the non appearance of notes from the Apple Isle recently if you think the reason is that there is nothing to write about, you're certainly partly right!

Although there is not as much on the air activity as there should be, V.h.f. Group meetings have been well attended. A recent film show arranged by Bryan 7ZBE was well re-

(Continued on Page 22)

SIDEBAND

Phasing, Xtal Filters, Balanced Mod., Linear Amps., Vox

Sub Editor: BUD POUNSETT, VK2AQJ,
6 Alice Street, Queanbeyan, N.S.W.
ADDRESS CORRESPONDENCE FOR THIS PAGE DIRECT TO THE SUB EDITOR

BREAK-IN OR BREAK-UP

The round table form of contact is certainly very popular on all bands, ones involving half a dozen or so countries are not uncommon on the DX bands and provide a great deal of enjoyment. They also have the great advantage of keeping a number of stations on one channel instead of three or four, making it possible for a large number of operators to enjoy their hobby on a given band at one time. Consider five round tables with six stations in each, we have 30 stations occupying five channels instead of 15. This fact must be recognised when an analysis of band occupancy is conducted at any time.

These round tables develop from a contact between just two stations. Sometimes they mushroom to large proportions in a very short time from the initial contact and sometimes the original two have quite a discussion before another joins in, or may be, they have made a sked to discuss some subject and would prefer to remain a two-some. Three can also be a crowd on an Amateur frequency!

How can we convey to others that we do not wish a round table to spring up? We could politely tell the third chap he is not welcome but this is rarely done. We could tell him impolitely to leave us be but this is even more rare, I am pleased to say. A simple way suggests itself. We transmit lower sideband on 40 and 80 mx and upper on 20, 15 and 10, so if you want to be left to discuss some common interest, why not both change sidebands? If someone else calls in and also mentions that you are using the sideband not normally used for that band, a simple explanation will give him the message and if he has any tact at all, he will surely sign out. How about giving this a go or do you have a better answer?

MORE ON THE VICEROY

Recently several VK3s, including VK3AC, have been having regular 40 mx contacts with Ted G8PO in Portsmouth. G8PO is a well known retired Royal Navy man and has served at Navy Headquarters in Melbourne. These contacts have been made on or about 7095 Kc. from 4.30 to 5.30 p.m. Australian Eastern Time with signals up to S8 at times. G8PO observed that the clean crisp signals without much bass response were far more readable than others, so turned to his own tx, a K.W. Viceroy, to find out if even better results could be obtained. This tx was built by an Amateur for Amateurs and is easily "got at".

Ted came up with a worthwhile improvement which is made by alignment only, the soldering iron remains cold. The signal emanating from G8PO is without doubt as R5 as you could wish to receive. It shines under difficult crowded band conditions as I have had the chance to check myself during a long 100 per cent. contact with Ted on a Saturday afternoon.

A frequency standard is required to provide signals of 433.2, 434.45, 434.6 and 435 Kc. By interpolation, a BC221 frequency meter will meet these requirements. Here are the five steps involved:—

(1) Peak all the i.f. transformer cores to 435 Kc. (the carrier oscillator freq.).
(2) Peak the primary of i.f.t.2 to 434.6 Kc.
(3) Peak the primary and secondary of i.f.t.1 to 434.45 Kc.
(4) Peak the secondary of i.f.t.2 to 433.2 Kc.
(5) Peak the primary and secondary of i.f.t.3 to 433.2 Kc.

The Viceroy tx used by G8PO showed some instability in the i.f. amplifier, V4, an EF89. The cure was to provide additional filtering of the h.t. line to this stage and to install a 3 x 2 inch shield between the EF89 grid and filter—balanced modulator section. Ted found that he could not peak the i.f. transformers as already described without this shielding. He doubts if all Viceroy tx's have this trouble and asked me to include this in case one or two have this instability. My thanks go to Geoff VK3AC and to Ted G8PO for supplying this material.

THE LWM3 PART II.

A brief description of the LWM3 s.s.b. transceiver appeared in the April Sideband section. The electrical details and circuit diagrams are featured in the Nov.-Dec. issue of G.E. Ham News. The Jan.-Feb. edition has very detailed descriptions and photographs of this equipment. It is interesting to note that a tuning capacitor from a Command tx is used for the v.f.o. which uses the Clapp configuration and tunes from 2.5 to 2.7 Mc. Detailed panel, chassis and dial drawings are included so that exact duplication may be achieved. The authors W8HFH and W8DLD state that the experienced constructor should be able to build an LWM3 in from one to three months, depending on the availability of spare time. The cost would depend on the size of your junk box and is estimated to be in the £50 to £125 range, including the cost of a mechanical filter. They also state that this design has a wealth of ideas in it and nearly every Amateur will find some feature that may suit his needs.

The neat v.f.o. unit with its dial should be very attractive and popular. The dial is made from a Command dial and plastic. The Editor will have the G.E. Ham news containing Part II.—Mechanical Details by now, and your Sub-Editor has an additional copy of each part, so we can help you if you are interested. You could borrow them by sending along a large stamped self-addressed envelope to "A.R.'s" Melbourne address or to my own.

TR VILLIANY

Quite a few stations use mixer type v.f.o's. with one v.f.o. oscillator on at all times. This v.f.o. signal can mix with an incoming signal to produce a spurious response in the rx.

Some time ago while I was operating on 3795 Kc. in a traffic net, a fellow Ham said my signals were readable on 7030 Kc. Well, 3795 Kc. is not harmonically related to 7030, but I told him I would get off the air at once and check my exciter. I could not find this so-called "harmonic" on my own rx. I made some checks with Hams in my own city to be sure. They could find nothing.

I made contact with the station that had originally given me the report and asked him whether he was using a TR switch and whether his v.f.o. ran continuously? He confirmed this. I asked him to check again on 7030 Kc. and he came right back and said loud and clear on 7030 Kc. I asked him to disconnect his TR switch from his tx and connect his rx directly to the antenna. He did so and the "harmonic" he thought he had heard on 7030 Kc. was not there.

Perhaps this will save someone a great deal of time in trouble-shooting his exciter or tx. This mixing effect can and will happen with certain types of TR switches.

These last paragraphs were extracted from June 1961 "QST". It is a letter from Paul G. Marsha, K4AVU, and appeared in the Technical Correspondence.

GEOGRAPHY AND S.S.B.

With the recent resolution of the Federal Convention in Perth on the subject of High School Radio Clubs in mind, it would be profitable to people who will be arranging this activity to give serious thought to the installation of s.s.b. equipment. You have certainly heard of the good work done by Lee VK2AXK, at the Christian Brothers' College, Gosford. Lee and the boys of the School's Radio Club have been using single sideband on 80, 40, and 20 mx with considerable success. The construction of the equipment was a joint venture between Lee himself and that stalwart of sideband, Leo VK2AC. The tx is a W2EWL unit with several modifications. The v.f.o. at 5 Mc. has a cathode follower isolator between it and the balanced modulator. To obtain output in the 40 mx band, 3.5 Mc. s.s.b. is mixed with the second harmonic of a 5.5 Mc. crystal oscillator producing 7 Mc. s.s.b. The final of this rig consists of four 807s in parallel. The exciter uses crystal diodes in place of the original W2EWL design using tubes. The rx is made up of a crystal controlled front-end into a Command rx as a tunable i.f. followed by a third i.f. using a double half lattice crystal filter. This equipment gives very good results on the bands used, and s.s.b. ensures that high intelligibility is maintained on DX contacts. This results in the boys of the Radio Club getting an accurate first hand account of various overseas countries which must help them considerably in their studies.

— • • • —

DX NOTES

(Continued from Page 17)

HK0AB—Via W4DQS, 928 Trinidad, Cocoa Beach, Florida.
KS4BF—Also via W4DQS.
(Many of the above QTHs were kindly supplied by Bev. Calendar, W4CKB.)

STOP PRESS ITEMS

Steve Grimsley writes to tell me of his next trip to Antarctica. He will use the same call, i.e. VK0VK and expects to return to the snowy regions between October and December next. He is about to leave now for a spell in the States. Steve says, "I expect to be in Wilkes Land by next January and I will be on the air using all bands with modes c.w. and s.s.b. I will try to get regular 6 mx transmissions going with an automatic keyer and a beam into the auroral zone to give the VK boys something to look for." Steve's QSL manager is L. McMaster, W1AGS.

Another letter is to hand from Bill VK3AHO changing the schedule of the FW8 trip slightly. Bill says, "I now expect to depart Sydney, May 30, and then from Noumea on June 9. All being well I will commence transmission from Wallis on 10th June, using call FW8BH for a period of one month." Bill will handle the s.s.b. and hopes FK8AS, operating as FW-8AS, will manage the c.w. and a.m. Bill has W.A.C. on 80 mx s.s.b. and W.A.Z. No. 9 s.s.b. The first VK for both of these (Congrats Bill.)

Congratulations are also in order to VK3KB who now has reached the 300 countries wkd. mark. Only those who are struggling for those last few will know how hard it is to attain. It's akin to a four-minute mile. (Do you regret the hours spent, Alf?)

Finally a word or two about conditions. The winter cycle is now well established and the sunspot count will continue to remain low. This should put the higher frequency bands into a deathless slumber till the first warmth of spring. 20 mx at night, particularly the latter half, will be more dead than alive. 7 Mc. may be kind but how much so, remains to be seen. The present l.p. circuit on 14 Mc. to Europe around 0700 hrs. G.M.T. will fall away as the winter progresses. 73, Al VK4SS.

S.S.B. CRYSTALS
Set of Five Gold-Plated Matched Crystals
Mounted in HC6U Holders
Suitable for 455 Kc. I.F's.
Price £16-10-0 per Set + 12½% Sales Tax
Full details on request.
BRIGHT STAR RADIO
46 Eastgate St., Oakleigh, S.E.12, Vic. Phone 57-6387

SPECIAL! SPECIAL! SPECIAL!
GELOSO 4/103 144 Mc. V.F.O.
PRICE £6 Nett
(Postage Extra)
WM. WILLIS & Co. Pty. Ltd.
428 ELIZABETH ST., MELBOURNE, VIC.
Phone 34-6539

Correspondence

Any opinion expressed under this heading is the individual opinion of the writer and does not necessarily coincide with that of the publishers.

FACTS

Editor "A.R.," Dear Sir,

To comply with the Editor's request in his P.S. to the Correspondence in May "A.R.," and the requirement by VK3BG "only facts convince me," may I be permitted to reproduce verbatim, a section of my letter dated 28th Feb., '61, which fell into the "correspondence closed" category. It reads, "The writer 'gestimates' that conditions were fair to good for the period. Do I believe him or my friend, the Disturbance Forecaster at I.P.S., Sydney? His records show that November was disturbed and in the middle of the month, lasting for six days, one of the most severe magnetic storms for a number of years occurred. There were also two cases of the 'recurrent' type of disturbance, the only week-end being unaffected, was 19-20 November".

The severe disturbance of November '60 is still referred to in Ionospheric data. You will remember that VK3BG's observations were for week-ends.

In April '62 "A.R.," he makes the claim "His friends in the Arab world operate where they wish". How true. The recent disturbed ionospheric conditions have forced many commercials, at times, to abandon r.t.t.y. and revert to straight c.w. transmission and of course this helps in station identification. Guess what—two of the stations operating in the Amateur Service band of 14 Mc. used Arab country call signs. They were below 14,100 kc.

—F. T. Hine, VK2QL.

VICIOUS CORRESPONDENCE

Editor "A.R.," Dear Sir,

Everybody is entitled to express his thoughts and the more contentious they are, the better it is for us all. The rather vicious and sarcastic passages in recent letters are not becoming to their authors. There is an alarming tendency of some individuals to fail to keep strictly to the point and argue the case only on its merits, using facts known to them plus their own ideas.

If we think an author's views are "biased hogwash," "ridiculous as his previous ones" and that his head remains "under its customary sand-dune," we should treat him with ignore and leave the space available to others to deal with new points. Ideas have to gain support to be introduced as the vogue; if nobody writes indicating their approval, the silence shows contempt or neutrality. I feel a letter of disagreement is only necessary when others have written of approval.

So please let us not be so offensive in future and try to observe the ethics of gentlemen, even if we cannot have a gentleman's agreement.

—Ormond Guy.

GOOD MUSIC

Editor "A.R.," Dear Sir,

Through your columns I should like to get in touch with members interested in the reception of good music, particularly through v.h.f. f.m. broadcasting. I think there must be quite a number of Hams or Listeners throughout Australia, who, after reading the overseas magazines, feel that in this country we are lagging badly. To show what can be done on 95 megacycles, I quote the case of W5KEY who receives musical programmes perfectly at a distance of 200 miles from an f.m. station in Kansas City.

As most people know, f.m. programmes are received without static or fading and this is not so on the medium wave band with 2FC and 2BL, 30 miles from Gosford. On 30th June last a step backward was taken and Australia lost four of its f.m. sound transmitters to make the present total zero. Letters with comments on the above will be greatly appreciated if sent to this address.

—R. L. Gosford,
5 Mason's Pde., Gosford, N.S.W.

VHF NOTES

(Continued from Page 20)

ceived. A welcome visitor was Den 7DK, from the north. Bryan also delivered an excellent lecture to the general meeting on a transistorised v.h.f. g.d.o.

50 Mc.: No band openings reported, however many opportunities may have been missed through low activity. A few odd VK2 sigs heard and some commercial harmonics—that's all. Most local activity is, however, on this band, but 7ZAV, who could be relied upon to supply a contact a day, has forsaken the game for flying.

144 Mc.: 7ZBE operated from Flinders Island during May; be interesting to see his coverage. When 7LZ and 7PF operated from Mt. Barrow (5,000 ft.) recently, nothing was heard of them in Hobart—listening at the wrong time, no doubt; however, Channel 9 now operating from Mt. Barrow puts very little direct signal into Hobart (100 miles away)—only a signal reflected from Mt. Wellington.

The Athol Johnson Memorial Contest, held annually to foster portable-mobile activity in VK7, was won this year by 7ZBE (he seems to be the only one mentioned this month!). Most of Bryan's contacts were whilst mobile, so it seems the rules are at last reasonably thought out. We're still trying to get more stations interested in this contest.

Preparations are well in hand for Oscar II., probably by now in operation. Peter 7PF has been appointed an Oscar Co-ordinator and is keeping interest high. We are hoping for quite a few log returns this time.—7ZAO.

NORTHERN TERRITORY

Not much news to report from VK8 this month. April 12, worked JA6ASW and JA-2CDL; 14th, HLKA and t.v. very strong, no JAs; 18th, heard JA working VK9AU; 24th, heard JA6; 23rd, good JA opening around 5 p.m., VK9 and VK5 heard; 1st May, worked JA6 and JA5.

Had tx off the air between 16th and 25th, putting a QB3/300 in final; can now run about 120w. input. Am running skeds with VK6, transmitting on 50.4 from 9.30 to 9.45 E.A.S.T., and listening from 9.45 to 10.0 E.A.S.T. Would also like skeds with North Queensland. That's about all for now, hope to have another VK8 Z call soon, in Darwin. 8AU.

PAPUA

April opened quietly on 50 Mc. in Papua, with 9NW, 9CK, 9AU and 9ZBV (just back from leave) active. On 1st, JA1 was worked at 1950 hrs. Weak JAs heard 2000-2215 on 9th, and again on 11th from 2100-2200, but no contacts were made. A good opening to JA on 12th between 1745 and 1830 hrs. when JA1, 2 and 3 were worked, more weak JAs heard between 2000-2100 hrs. On 17th, JA6s and 3s worked at 2030. 18th, nine JAs worked by 9AU 2030-2130, JAs 1, 2, 3 and 5. Excellent openings on 23rd to JA when at least a dozen stations were worked by each of 9CK, 9NW and 9AU, the band being open to JA from 1645-1800, then from 2000-2015, and finally from 2200-2400, with most signals peaking S9. 19th, JA6WS worked at 2215; 20th, JA6BQE worked at 2055; 21st, JA1s worked 2000-2030. At 1850 hrs. on 24th, two KH6s heard in QSO on 50.2, peaking S6, much frantic calling on phone and c.w. did not obtain a QSO. 27th, JA1 worked at 1635. On 28th a station with an American voice was heard on 50.03 Mc. beaming N.E., but unidentified. On 30th, VK4NG worked by 9AU on back scatter with beam pointing to KH6 at 1825, R4 S5 both ways. In all, a most interesting month here on 50 Mc.

9ZBV back from leave, now has a 4 el. yagi in operation and is looking for DX. No activity this month on the other v.h.f. bands. Incidentally, I hear by the grapevine that 9AU's signal was heard during the month at Batchelor VK8, but no date is known. However the beam was pointed in that direction on several occasions.—9AU.

GELOSO G222-TR
ALL-BAND A.M. PLATE MODULATED XMITTER

Power Output: 60 Watts Phone, 75 Watts C.W.

PRICE **£112** plus 12½% Sales Tax
(Freight extra)

WM. WILLIS & Co. Pty. Ltd.
428 ELIZABETH ST., MELBOURNE, VIC.
Phone 34-6539

LOW DRIFT CRYSTALS

FOR

AMATEUR BANDS

ACCURACY 0.02% OF STATED FREQUENCY

3.5 and 7 Mc.
Unmounted, £2/10/0
Mounted, £3/0/0

12.5 and 14 Mc.
Fundamental Crystals, "Low Drift,"
Mounted only, £5.

THESE PRICES DO NOT INCLUDE SALES TAX.

Spot Frequency Crystals Prices on Application.

Regrinds £1/10/0

MAXWELL HOWDEN
15 CLAREMONT CRES., CANTERBURY, E.7, VICTORIA

THE NEW "A.R."

LOG BOOK

IS NOW AVAILABLE

Larger, spiral-bound pages with more writing space.

Price 5'6 each

Postage extra.

Obtainable from your Divisional Secretary, or W.I.A., P.O. Box 36, East Melbourne, C.2, Victoria.

FEDERAL AND DIVISIONAL MONTHLY NEWS REPORTS

★ ★

(SEND CORRESPONDENCE DIRECT TO DIVISIONAL REPORTER NAMED AT PARA. END)

FEDERAL

NEW CALL SIGNS (JANUARY)

VK—

New South Wales

2AW—B. Dale, 19 Robinson St., Wollongong.
2UN—A. H. F. Nickols, 5 Awatea Rd., St. Ives.
2AZJ—R. C. Kohlhardt, 21 Cowan Rd., Mount Colah.
2ZPB—P. W. Campbell, 3 Earle Ave., Ashfield.

Victoria

3AK—B. J. Wootten, 8 McKenna St., Avondale Heights.
3AR—R. C. M. Grimble, Station: Laharum, via Horsham; Postal: Private Bag, Horsham.
3AW—L. G. McCluskey, 13 Holloway St., Newport.
3GL—J. T. Dearn, Lot 21 Stanley St., The Basin.
3RS—R. C. Shortell, 46 Moyston St., Hawthorn.
3YB—R. R. Babb, Elmo Rd., Montmorency.
3ZNB—A. J. Hyslop, Station: "Morella," Anderson; Postal: C/o. Railway Station, Anderson.
3ZNH—P. J. Lawler, 50 Mollison St., Dandenong.
3ZNT—F. G. Storey, 407 Stephensons Rd., Mt. Waverley.
3ZOB—T. L. E. Floyd, 43 Tibrockney St., Highett.
3ZOI—P. J. Gleeson, 512 Racecourse Rd., Flemington.
3ZMX—E. D. Buck, 263 Gooch St., Thornbury.
3ZMY—A. Camp, 16 Leslie St., St. Kilda East.

Queensland

4AE—J. C. Treby, Station: 8 Coyne St., Kirra; Postal: 24 Inala St., Tugun.
4SB—J. S. Strudwick, 13 Fowles St., Roma.
4ZGN—G. N. Scott, 31 Basnett St., Chermside.
4ZJM—J. A. Mackay, Station: 84 Mill St., Gordonville; Postal:: P.O. Box 173, Gordonville.
4ZTC—A. J. Crane, 35 Morley St., Toowong.

South Australia

5IK—I. N. Cousins, 3 Wootoona Tce., St. George.
5WB—E. W. Blake, 134 Yorktown Rd., Elizabeth Park.
5ZBP—A. W. Pierson, 619 Seaview Rd., Grange.
5ZDP—D. J. Seedsman, 13 Jervis St., Torrensville.
5ZER—D. G. Aslin, Station: Princes Highway East, Mt. Gambier; Postal: C/o. P.O., Mt. Gambier.
5ZGH—B. G. Hines, 49 Hughes St., Unley.
5ZIB—I. S. Brown, 5 Indarra St., Taperoo, Largs Nth.
5ZIC—I. R. Clayton, 7 Payneham Rd., St. Peters.

Western Australia

6ZDE—B. A. Cook, 28 Pier St., East Fremantle.
6ZDP—R. W. Parks, Lot 57, Canada St., Dainella.
6ZDF—H. Farney, The Crescent, Maddington.
6ZDX—J. L. Orr, 31 Scalby St., Doubleview.

Northern Territory

8TA—G. Cole, 6 Conigrave St., Fannie Bay, Darwin.
8ZV—O. C. Winterton, 3 Hingston St., Parap, Darwin.

NEW CALL SIGNS (FEBRUARY)

VK—

Australian Capital Territory

1AW—J. A. Weddall, 1 Buchanan St., Narrabundah.

New South Wales

2AD—A. Dawson, 22 Thurlow St., Redfern.
2BE—L. W. Louttit, 3 Greenhills St., Croydon.
2GB—J. W. Birdsall, 23 Ebley St., Bondi Junction.
2EM—E. J. Mulholland, 79 Queen Victoria St., Bexley.
2AOP—W. Purdy, 7 Dalziel Ave., Panania.
2AOQ—M. S. Hodgson, 3 Darling St., Chatswood.
2AWT—N. J. Watling, 116 Windsor Rd., Richmond.
2AXW—G. Whitehead, 1 The Strand, Gladesville.
2ZCJ—C. J. Ella, 12 Chapman St., Gymea.
2ZCK—R. C. Slip, 14 Parry St., Ryde.
2ZDN—D. N. Mills, 21a Johnstone St., Cardiff.
2ZGE—G. E. MacPherson, 4 Russell St., Woollahra.
2ZHW—G. E. Watts, 2 Esdaile Place, Arncliffe.
2ZNL—R. N. Lee, 85 Point St., Bulli.
2ZPF—P. F. Watkins, 79 Allawah St., Blacktown.
2ZWC—C. W. Camp, 24 Clanwilliam St., Chatswood.

Victoria

3ZOJ—R. J. Pether, 32 Older St., South Caulfield, S.E.8.

Queensland

4GI—G. J. Griffiths, 2 Wills St., Townsville.
4ZKP—K. M. Pitcher, 34 Blackheath Rd., Oxley.

South Australia

5CR—L. K. Catford, 22 Ranger St., Elizabeth Park.
5PY—C. W. Hope, 12 Alexander St., Elizabeth Park.
5ZGL—L. G. R. Godfrey, 43 Charles St., Norwood.

Western Australia

6ZDJ—K. L. Miller, 7 Freeman St., Melville.
6ZDI—R. Forte, 66 Outram St., West Perth.
6ZDO—G. R. Grieve, 95 Canning Highway, East Fremantle.

— • • • —

FEDERAL QSL BUREAU

A further change in the A.R.R.L. QSL Bureau set-up is W6/K6, San Diego DX Club, P.O. Box 6029, San Diego 6, Calif.

Projected visits to Australia by U.S.A. Hams include, W6YY, John, May 1962; W7QYA (YL), Flo Majerus, and OM, March/April 1963; and my old friend, Al Scarlett, W2CC, and YL April 1963. Al proposes including VK2, 4 and 5 in his itinerary as well as a longer stopover in Melbourne.

Call signs, etc., of the 1963 Antarctic personnel notified to date are:—

Wilkes:—
VK0DS (VK3ZIE), D. Seedsman (Vic.).
VK0JO, J. Oshea (Vic.).
VK0KT, Ken Tate (Vic.).
VK0CG—C. Gorman (N.S.W.).
Davis:—
VK0JM (VK5JM), J. Molle (N.S.W.).
VK0DW, D. Ward (S.A.).
Macquarie Island:—
VK0BB, B. Bell (N.S.W.).
VK0JR, J. Miller (N.S.W.).
Mawson:—
VK0JW, J. Watts (N.S.W.).
VK0RH, Ross Harvey (N.S.W.).
VK0BW, B. Woodbury (Vic.).

As no QSL manager arrangements are known all cards for the above should be routed care VK3RJ.

It seems that nobody reads these notes any more. Plaintive and repeated bleats for info. on the following stations have fallen on barren ears: VK9MP, VK9PU and VK9PZ and the suspected pirate, CR10AB. Any info. at all would be appreciated, likewise any known dope on R.A.A.F. Receiver Type AR10.

Denis, G3MXJ, currently radio operator on the Orion, has been a frequent visitor to Melbourne when that vessel has been in port. He has managed to glean home news from Jack Box, G6BQ (top man top band), of Gravesend, while in Melbourne. Denis has no Ham-band rig on the Orion. He contemplates giving the sea a rest shortly and taking a land based job with C. & W.—maybe ZD8—who knows?

A current burst of DXpedition activity during April/May has caused pile ups on the c.w. portion of 14 Mc. These include W4DQS and associates at Baja Nuevo and Swan Isld.; W1MV/KP6 at ???; VU2US/AC5 in Bhutan; Danny Weil cooling his heels at Papeete under FO8AN, and Gus W4BPD with his huge Indian Ocean and African itinerary under various call signs.

Ray Jones, VK3RJ, Manager.

— • • • —

NEW SOUTH WALES

HUNTER BRANCH

The visiting lecturer at the April meeting of the Branch was Harold VK2AAH. He spoke about d.f. loop aerials and in particular described a unit of his own design, with which he has had considerable success in 7 Mc. hunts. A well chosen selection of slides accompanied the lecture, at the conclusion of which, Harold described the now well known, to him, "shelf bracket" antenna, so called because it resembles a shelf bracket. This does wonderful things to 144 signals and is ideal for fitting on any car. See Harold for all the details.

The meeting also heard the views of one councillor on the Amateur's position in present day affairs and the resulting discussion was healthy and to the point, a very good thing indeed.

The thanks of all Branch members go to Harold VK2AAH for a really good meeting. Among the 16 members, six associates and two visitors present was Leo 2QB, whom we have not seen for some time.

Local v.h.f. activity is running at an all-time high and as proof of this most members listed their names for an 8025 Kc. crystal order. Apparently it is possible to get these crystals for some small charge and, as this frequency, when multiplied, happens to be the local calling frequency on 2, considerable interest has been shown by those interested in v.h.f.

Usually the 80 mx re-broadcast on Monday night is on 3573, not 3503! Any interested reader who wishes to know what all this is about, ask anybody else, all the others know.

A well known member, while hurrying to the shelter of his car after leaving the last meeting, was seen to bend very close to the ground as if to study it more closely. This same member is reported to have come into violent contact with a chain dividing two sections of the College grounds recently. As a Sydney visitor also re-enacted this performance it has been suggested that a suitably inscribed plaque "Molesworth-Otty Walk" be erected in the vicinity. Your correspondent welcomes members' views.

Tony, who listens to 2NX with one ear all the time, has at last received his call sign. Rumour has it that he may be heard first on 288, so take a listen for 2ZCT if you have the gear. Tony's QTH at Whitebridge should be a good take off spot for Sydney as well. During the month there have been three new arrivals at the Thompson QTH out by the lake. Firstly, twin harmonics (congratulations Jim) and then a new Collins rx (congrats. again). More congratulations, this time to Bill 2XT who came in first in the Urunga 144 hunt. A good time was apparently had by all and it was most heartening to hear quite a few of the local boys from their home QTH in the scramble. Special thanks from the Urunga scramblers to Ron 2ASJ putting in a fine signal from Stockton. Harold 2AHA and Bob 2IN with Perc also created some extra QRM up Urunga way. Ian 2AJF is still making excuses for not having a good signal but will be on, he assures me, soon. He did work a DX station in Alaska though. Of course it was on Chris' gear. This probably means that Chris 2PZ has his gear ready again after the explosion of last year.

Stuart 2AYF almost has his new shack ready and any time now the Monday night broadcast will come from there. At the present it is being presented on a roster basis by members, one very consistent signal being from Les 2RJ who always comes in at my QTH S9.

Those who are contemplating the building of the "Minitran" or project 2 mx converter would be well advised to get in touch with Stan 2AYL who is able to supply, for a very reasonable charge, ready cut chassis tops for both projects. There should now be no reason for local members not being able to transmit and receive on 2. Why not make it a winter project?

The next meeting of the Branch will take the form of a visit to NBN studios in Newcastle at 8 p.m. on Friday, 8th June. Watch the Bulletin and listen to 2WI and 2AWX for details of assembly place. The next social meeting will be at Bill Hall's tavern, Cooks Hill, on the fourth Wednesday, which is 27th June. Regular 2 mx fox hunts are being organised and for details listen to 2WI or the Hunter Branch broadcast which is at 1900 E.S.T. each Monday on approx. 3573 Kc. Call backs are taken firstly on 80 and then on 40, while 144 call backs are taken by either Gordon 2ZSG or Stan 2AYL. 73, de 2AKX.

CENTRAL COAST ZONE

The Gosford Radio Club extends a welcome to 2ZGM and 2ACU who have just arrived in our midst. Geoff was formerly at Ungarie in the Central West and now radiates a powerful drop of s.s.b. on 144 Mc. from Qurimbah. Rod 2ACU is now at West Gosford (nigh into 2AI) and has an HT37 and NC300. He says he has forsaken the bush (Urunga) for the city lights but that's not the way we look at this pleasant watering place. 2EH now gets out well on 80 mx, having lengthened the antenna. I understand he had a break from house building to

WARBURTON FRANKI

Radio and T.V. Parts Division

PRE-STOCKTAKING SPECIALS

CONDENSERS

- **ELECTROLYTIC**
  Upright Metal Can Type
  200 μF. 400 v.p., **10/6 each** + tax 25%
  500 μF. 25 v.w., **4/6 each** + tax 25%

- **ELECTROLYTIC**
  Pigtail Type
  500 μF. 6 v.w. .... **3/6 each** + tax 25%
  400 μF. 10 v.w. .. **3/9 each** + tax 25%
  100 μF. 50 v.w. .. **3/9 each** + tax 25%

- **MICA**
  0.001 μF. .... **10/- dozen** + tax 25%

- **SPEAKER TRANSFORMER WINDINGS** Assorted bags of 12, **10/- per bag** + tax 25%

- **RECORDING TAPE**
  200 feet on 3⅛" Reel, **5/- ea.** + tax 12½%
  900 feet on 5" Reel, **25/- ea.** + tax 12½%

- **CHASSIS PUNCH SETS**
  Hammer type:—5/8", 3/4", 1-3/16".
  59/6 S.T. exempt

- **CRYSTAL PICK-UP CARTRIDGES**
  Turn-Over type C/W L.P. and Std. Sapphire Stylii .... **18/-** + tax 25%

- **BATTERY CHARGER VALVES**
  6 Amps., 90 Volts, screw base, equiv. Tungar, Revall, etc. .... **30/-** + tax 12½%

- **SPIRAL TYPE INDOOR T.V. AERIALS** **18/9** + tax 25%

- **STEREO INDICATORS**
  Attractive design, Kew type ST-20-G
  75/- each + tax 25%

- **HOOK-UP WIRE, Pushback**
  7/010, five colours available. 100 ft. reels .... **8/- reel** + tax 25%

- **TRANSISTOR TRANSFORMERS**
  For coupling to 600-ohm line.
  .. **5/- each** + tax 25%

- **KEW TRC-101 TRANSISTOR CHECKERS** Checks all functions, also Diodes. **10 Gns.** + tax 12½%.

- **RESISTORS**
  20 Watts, 2,000 or 2,500 ohms.
  2/- each + tax 25%

- **STEP-DOWN TRANSFORMERS**
  240v./110v. at 500 Watts.
  £8 each + tax 12½%

- **AUTO AERIALS**
  Retractable type. 37½" high extended, retracts to 1". and can only be extended by use of a key. Price includes lead and two keys.
  60/- + tax 25%

POWER TRANSFORMERS

240v. Prim., 136v. Sec. at 25 mA, 6.3v. at 1.7a.
20/- each + tax 25%.
Plus Pack and Post. 2/6.

240v. Prim., 385v. a side Sec. at 150 mA., 6.3v. at 2a., 6.3v. at 2a.. 5v. at 2a.
60/- each + tax 25%
Plus Pack and Post, 5/-.

240v. Prim., 410v. a side Sec. at 180 mA., 6.3v. at 4a., 6.3v. at 5a.
100/- each + tax 25%
Plus Pack and Post, 7/6.

TRANSFORMERS

Superseded Numbers — Output Type

SLASHED TO CLEAR

2 only type 870—10,000 ohms P.P./2 or 8 ohms, at 6 watts, **40/- each** + tax 25%
4 only type 871—10,000 ohms P.P./2 or 8 ohms, at 12 watts, **60/- each** + tax 25%
2 only type 916—8,500 ohms U.L./2 or 8 ohms, at 12 watts .... **70/- each** + tax 25%
3 only type 921—6,600 ohms U.L./2 or 8 ohms, at 20 watts .... **80/- each** + tax 25%
4 only type 931—4,500 ohms U.L./2 or 8 ohms, at 20 watts .... **80/- each** + tax 25%
3 only type 929—4,000 or 2,500 ohms S.E./15 or 2 ohms, at 10 watts, **50/- each** + tax 25%

Packing and Postage on any of above, 5/-.

ALSO Few Only—6 watt Ultra-Linear Output Transformers
8,000 ohms Primary to 2 ohm Voice Coil, **20/- each** + tax 25%
Plus Packing and Postage 2/6.

WARBURTON FRANKI
359 LONSDALE ST., MELBOURNE — MU 8351

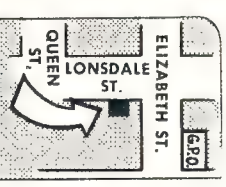

OPEN
SAT. MORNINGS

TRADE
ALSO SUPPLIED

● *Please include Postage or Freight with all Orders*

renovate the modulator. Ernie insists that he is retired, of course. I think it will be a while before he joins the daytime net on the Senior Citizens Band (7 Mc.).

Reg 2AI is still rather elusive and recently spent four days at Walgett. The KWM2 is put to good use when time allows. John 2RF now has a good signal on 80 mx using a G5RV antenna and Class B modulation. He also operates 7 Mc. and 144 Mc. Incidentally, there are about seven or eight active two-metre stations in this district. 2ASA is on this and other bands from Tonkley. Phil 2TX has plans for a beam on 14 Mc. but at present uses a G5RV antenna to his HT37 and Drake 2A.

Ken 2AFH, who can listen on 144 Mc., will soon be transmitting. Frank 2AFJ, nearby at Peats Ridge, is now quite active on two. Major 2RU works this band and participates as a mobile in the 2 mx field days when it's not raining! A 3/12 tube puts out a very good signal. Wally 2AFH from Terrigal has a sideband rig under construction with help from Peter, his second op., and technical advice from Joe 2JR.

Alec 2AAK has just started on two from Kulmura. It's on top of a hill and Sydney stations pour in like locals. Gosford contacts are more difficult, it seems. The club has had two very fine lecturers recently in Les 2ZBJ of Camden and Bob 2OA. The former chose 2 mx converters and Bob, g.d.o's. I wonder how many are now equipped with **calibrated** g.d.o. for 3-200 megacycles? The writer promises to re-calibrate his long-suffering 955 model. Incidentally, wiping contacts to a split-stator condenser can bring much unhappiness on the 100-200 meg. range and simple pigtails at each end of the shaft bring a miraculous cure. Cheerio, 2ON.

BOORAGUL HIGH SCHOOL RADIO CLUB

During the opening of the Radio Club at Narrandera High School, 2ATZ called in and gave the boys and girls another contact on 40. This apparently reached the ears of the A.B.C. and we gained some free publicity on the news broadcast. Thanks to Pierce 2APQ, the School Radio Clubs were given a good deal of publicity at the Convention and this also reached the television news.

During the month several club members from the junior section sat for the written exam. for the elementary certificate and the practical tests are being conducted each Friday. Three members have already satisfied requirements in the written section and nearly all the group has done well in the practical tests.

The Superintendent of Police has promised us a visit to the VKG tx at Waratah early in June and we are all looking forward to this. The junior certificate written examination is to be held on June 12. Please listen for our club station, 2ATZ, at 0300 G.M.T. week days except Thursday on 40 and at 0615 G.M.T. Tuesday and Friday on 80. 73, 2ATZ.

— . . . —

VICTORIA

MAY GENERAL MEETING

Only about 25 were present at the May meeting of this Division. After routine matters had been dealt with, the Secretary moved that Max 3ZS be made an Honorary Life Member, in recognition of the many years of service he has given to the Institute. There was a rush of seconders to the motion which was carried unanimously. It appeared Max was the only one present surprised by the motion, and was obviously deeply moved when he thanked the meeting.

Only three new members for this month, namely Jas Brown, 3ZIJ, as a full member, and T. Armstrong and D. James as associates.

WILLIS INDUCTANCES

B. & W.	3002	½" dia.	8 t.p.i.	5/3
"	3003	½" "	16 "	5/3
"	3006	⅝" "	8 "	6/3
"	3007	⅝" "	16 "	6/3
"	3010	¾" "	8 "	7/4
"	3011	¾" "	16 "	7/4
"	3014	1" "	8 "	8/5
"	3015	1" "	16 "	8/5
"	3018	1¼" "	8 "	10/6
"	3019	1¼" "	16 "	10/6

WM. WILLIS & Co. Pty. Ltd.

428 ELIZABETH ST., MELBOURNE, VIC.

Phone 34-6539

The Federal Councillor, with assistance from the Secretary and 3ZS, gave a resume of the Federal Convention, with emphasis on the humorous aspects.

The evening was topped off with a lecturette by Michael Osborne, who spoke on the theory of tunnel diodes. This is the second theoretical lecturette by Michael in recent months. It is to be hoped he can be persuaded to devote an evening to showing us the practical applications of the gadgets he has described.

At the next meeting Mr. Little, from the Physics Department of the University, will demonstrate the equipment they are using for Direction Finding their research balloons. Members will recall that the Institute assisted in the initial d.f. tests with these balloons.

MAY COUNCIL MEETING

The most interesting items discussed included the W.I.C.E.N. circular. So far 60 members have indicated their willingness to participate. In due course, all those interested will receive further details. There is still a large amount of detail to be worked out, but at long last we have official recognition and something to work for.

Project Oscar needs all the support Amateurs can give. Bill 3ABP has been appointed VK3 co-ordinator. He will welcome any enquiries or offers of assistance.

The Moon-bounce project is in trouble. A new site has to be found where we can erect a 20 ft. diameter antenna. Offers to Michael Osborne please!

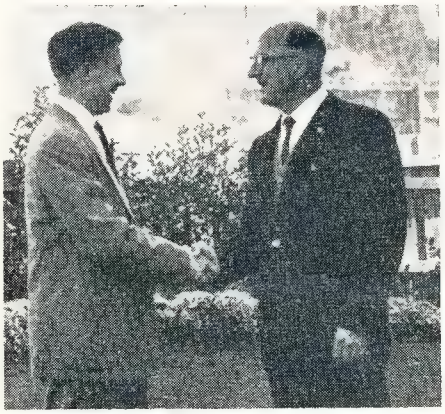

In recognition of the work done by G. Maxwell Hull, VK3ZS (the retiring Federal President), the Victorian Division of the W.I.A. has elected him as an Honorary Life Member.

During his period of office, the Federal Executive has been faced with some of the most difficult problems yet to be met with by any W.I.A. Federal body, and to express their gratitude for a job which has not been easy, the Victorian Division elected Max Hull to life membership.

Our photo shows David Wardlaw, VK-3ADW (Victorian President), congratulating Max Hull on being made a Life Member.

The agenda items from the Federal Convention were all reviewed and discussed. Council voted in favour of ratification.

As at the first of May, the Victorian Division had 12 life members, 604 full members, and 114 associate members. The Publicity Officer will be making a drive to increase membership.

Council supports the idea of using G.M.T. in Amateur Radio matters, with the exception of Council meetings. Some members objected to meetings lasting into the afternoon!

GENERAL NOTES

Over the years ingenious ideas for hiding tx's have been thought out. Remember the couple with the pram in the Treasury Gardens? Well now the simplest idea even thought of has been tried. Wonder nobody tried it before. So delightfully simple—just don't turn the final on. If I didn't know better, I'd say this was a 3LN effort.

Now that Len is in this, he would be the one person I thought impossible to ruffle. In all the years I've known him, he has had a perpetual grin. But did you see the news telecast on a recent Sunday? Our usually debonair Len salvaging shirts from his shop window. No grin this time, but then who could grin if pulled out of bed at 3 a.m. because a car decides to enter a shop through a plate glass window. And I bet that dressing gown would look good on Kodachrome!

Now we have the "payola" in, have you ever spent an hour listening over the bands to find out how others spend their time when they're not "hamming" or watching t.v.? Topics heard discussed recently included fishing, photography, the formation of an eastern suburbs radio club, a game of chess played via 2 mx, boat building, and sometimes radio.

On the subject of chess, did you see Hancock's half hour when he played an Amateur Operator? As an operator, he was an Advisory Committee's nightmare. The finer points, no doubt, were lost to the general public, but the script was undoubtedly written by somebody closely associated with the hobby.

Think back, how often have you mislaid your pencil when you most wanted it, hunted it out only to find it needs sharpening. If you say you have never grabbed a hot lead and said what Hancock's expression inferred, nobody will believe you.

Hope you have read your W.I.C.E.N. circular and returned the slip attached thereto. Now that Civil Defence is getting some real recognition in official circles, let us show that Amateurs are of real use to the community.

Oh yes, the hidden tx without a final. Believe me or believe me not, as you wish, but the hunters still found it!

NORTH EASTERN ZONE

During the month of April most of this zone's active members were heard working the bands, some on DX. 3IG (ex 3ZKW) came on early in the month and his contacts with YV, K, W, P and DL land has caused considerable envy amongst locals. 3AWT was talking about building a 6 mx rig earlier on but has since been a.w.l. 3AOB recently begot himself a spouse and the poor woman soon learnt what being married to an Amateur meant; he took his portable with him for the Eildon honeymoon. From that location he was heard many times. I am sure other zone members will join me in expressing hopes for all that is best to Ted and his lady.

Understand that 3AHO is off to Wallace Isl. soon for a DX-pedition; these cow-cockies! 3ALF has constructed a quad and has been pointing the bone at several of us re assistance with its raising. 3ACK still fiddling with his star-gazing machine and during his rare calls, discusses slow motion drives, prisms, mirrors and washing machine parts in lieu of tubes, condensers and tuned circuits. 3ACD has formed the nucleus of the Shepparton High School Radio Club. The Yarrawonga Radio Club, under the guiding hand of 3ZU, offered several candidates for the recent exams.

The two-stroke motor which 3AUL uses to charge his batteries was playing up earlier this month. He has since drained off the surplus water with good results, because with higher voltage, he worked several JAs on 15.

As decided at the Convention, hook-up overs have been generally maintained at two minutes. However a few exceptions have occurred and 3AUL, the zone co-ordinator, has been urged to bare the fangs at them. Topics such as a zone certificate, c.w. practice within the zone, two-day convention for '63, have recently been discussed, meeting with varying amounts of enthusiasm or disdain. The idea of a two-day convention was well received as

STH. WESTERN ZONE, W.I.A.,
and
GEELONG AM. RADIO CLUB

CONVENTION

9th and 10th JUNE, 1962

Business meeting on Saturday afternoon, Dinner at 6 p.m., followed by a Film Night. Sunday will have a car trial transmitter hunt, picnic lunch and the usual get together.

Fuller Details from VK3ABK,
22 Leonard St., Belmont, Geelong, Victoria.

it would permit of a dinner-dance for the ladies, games for the kids and fox hunts for the members.

Due to Scouting pursuits prior to and after Easter, I have had little time to snoop around the bands to gather info. during April. The urgency of other pursuits now being passed, zone members who have the irresistible urge to look over their shoulders (metaphorically) expecting to find me, will. 73, 3ASY.

EASTERN ZONE

Ken 3ZNK arrived back from VK2 where he spent his holidays near Sydney. Ken hopes to have his self-supporting tower up very shortly. David 3DY is spending some time on 28 Mc. with some fruitful QSOs during the daylight hours when the band is open. All being well, Graham 3QZ will be going to England in June for several months. He has now all the bugs out of his s.s.b. rig with good results on all bands. Jim 3ZBU is doing out his new shack, so temporarily off the air. Bill 3AMH, now at Traralgon, is active on all bands, including a.m. on 145.09 Mc. Bill is constructing s.s.b. for the v.h.f. bands.

In case you were unable to attend our recent Zone Convention, Cliff 3AIT was appointed as our official call-back station to 3WI, assisted by Graham 3QZ (3AQZ), and to be backed up by any other listening member, when either Cliff or Graham cannot make it. Please do not forget, thank you.

Unfortunately I have spent the last three weeks out of the zone on holidays in the s.w. zone, meeting Geelong, Colac and Ballarat Hams, so my news may not be complete. Trust everybody enjoyed themselves on the zone field day at Warragul Creek; our next family field day is to be held at Lakes Entrance on 4th November, 1962.

I want all zone members who have a 2 mx rx to participate in Oscar II. I have already handed out some reception report forms, so any without same, please contact me so I can forward you some. Only these special forms can be used, and these cover if you can only make several quick observations or constant detailed reporting. As only four reports were received in U.S.A. from VK land for Oscar I., very disappointg, we want this one to be a great success, so please do not let me down—remember the Kinnear Trophy.

Allan 3ZNB, down at Anderson, is quite active now on 2 mx. 73, 3ZCG.

MOORABBIN & DISTRICT RADIO CLUB

A very full and interesting month for members of that active bunch from the City of Moorabbin. The 80 mx tx hunt at the beginning of May was well attended and we were pleased indeed to have Arthur 3AUL—the King of Smoko—with us for the evening. Don't know how 3AUL felt about it all, but we were very glad to see him and be active participants in his rakes progress through the Big Smoke. Peter 3APD finally found the nasty little hidden tx in a bush under the junction of a maze of power lines. These last mentioned lines put everyone else right off the track to such an extent that Peter was the only one who found it and was thus the winner.

The next meeting night we were treated to a couple of very interesting films picked out for us by Laurie 3CN. Where does this chap get such good flicker fare? Same high standard every time. One film was on the 1961 Farnborough Air Show, the other being on the way the B.B.C. gets its "telly' to the populace. Having patted Laurie on the back for the way he chooses his films, I think he must now be gently chided for his lack of air time. It appears that he has (temporarily?) forsaken the tx for hi fi. Shame on you, Laurie.

Final fixture for the month was a social night at Hal Shirley's where a rumbustious time was had by all and once again our Treasurer, Peter 3XK, rubbed his hands with glee at the sizeable increment to the club funds. We laymen reckon we are in the millionaire class, but a professional accountant is harder to milk than a stone.

Perhaps for all of us the highlight of the month was a visit from John W6YY. John was the first American Honorary Member and being in Melbourne on business, wrote Stan 3TE, asking if he could meet the lads from Moor-

ROYAL FLYING DOCTOR SERVICE

REQUIRE

RADIO ENGINEER OPERATOR

WITH "B" CLASS LICENCE

FOR POSITION OF DIRECTOR AT THEIR WYNDHAM BASE TO COMMENCE DUTY IN NOVEMBER, 1962.

★

Excellent Salary, Free House, Electricity and Water, Non-contributing Superannuation.

★

Apply in writing to::

SECRETARY, ROYAL FLYING DOCTOR SERVICE OF AUST.

422 Little Collins Street, Melbourne, C.1, Vic.

WODEN MULTI-MATCH MOD. TRANSFORMERS

UM0	10-Watt	Audio	£5/16/0
UM1	30	,, ,,	£7/12/6
UM2	60	,, ,,	£10/13/3
UM3	125	,, ,,	£12/1/9

Prices include 12½% Sales Tax
FREIGHT EXTRA

WM. WILLIS & Co. Pty. Ltd.
428 ELIZABETH ST., MELBOURNE, VIC.
Phone 34-6539

Wireless Institute of Australia

Victorian Division

A.O.C.P. CLASS

commences

THURSDAY, 2nd AUG., 1962

Theory is held on Monday evenings, and Morse and Regulations on Thursday evenings from 8 to 10 p.m.

Persons desirous of being enrolled should communicate with—Secretary W.I.A., Victorian Division, P.O. Box 36, East Melbourne (Phone: 41-3535, 10 a.m. to 3 p.m.), or the Class Manager on either of the above evenings.

BRIGHT STAR CRYSTALS

FOR ACCURACY, STABILITY, ACTIVITY AND OUTPUT

Our Crystals cover all types and frequencies in common use and include overtone, plated and vacuum mounted. Holders include the following: DC11, FT243, HC-6U, CRA, B7G, Octal, HC-18U.

THE FOLLOWING FISHING-BOAT FREQUENCIES ARE AVAILABLE IN FT243 HOLDERS:—
6280, 4095, 4535, 2760, 2524 Kc.

5.500 Kc. T.V. Sweep Generator Crystals, £3/12/6.
100 Kc. and 1000 Kc. Frequency Standard, £8/10/0 plus 12½% Sales Tax.

Immediate delivery on all above types.

AUDIO AND ULTRASONIC CRYSTALS—Prices on application.

455 Kc. Filter Crystals, vacuum mounted, £6/10/0 each plus 12½% Sales Tax.

ALSO AMATEUR TYPE CRYSTALS—3.5 AND 7 Mc. BAND.

Commercial—0.02% £3/12/6, 0.01% £3/15/6. plus 12½% Sales Tax.
Amateur—from £3 each, plus 12½% Sales Tax.
Regrinds £1/10/-.

CRYSTALS FOR TAXI AND BUSH FIRE SETS ALSO AVAILABLE.

We would be happy to advise and quote you.

New Zealand Representatives: Messrs. Carrel & Carrel, Box 2102, Auckland.

Contractors to Federal and State Government Departments.

BRIGHT STAR RADIO

46 Eastgate Street, Oakleigh, S.E.12, Vic. Phone: 57-6387

With the co-operation of our overseas associates our crystal manufacturing methods are the latest.

abbin. As his visit didn't coincide with any particular club function we organised a shindig at the QTH of Ken 3ACS in John's honour. A most pleasant evening for a most pleasant bloke. Hope you get back to VK3 again, John.

The Monday night club net at 8 p.m. on or near 3.6 Mc. continues to be very popular. Your scribe—who acts as control under the club sign of 3APC/P—has the uneasy feeling that occasionally, very occasionally mark you, he gets put in the position of Aunt Sally, so many brickbats are slung at him. The net is getting so large these nights that we shall have to form a splinter group if any of us are to get to bed before midnight. 73, 3AFQ.

— . . . —

QUEENSLAND

Amateurs in Queensland during April were kept busier than the proverbial bees in this land of sunshine. The activities seemed to come at the one time and, when mixed with a lot of holidays, the possessors of a lot of call signs were heard and seen. It seemed to many trying to have a rag-chew, on 7 Mc. in particular, that there was only a thread or two left after so many others had crowded the band. The Division Convention and the Annual General Meeting headed the list of "do's".

The Annual General Meeting of the Queensland Division of the Wireless Institute of Australia was held at the State Service Union rooms in Brisbane on April 27 at 8 p.m. with Peter 4PJ in the chair. During the proceedings, Vice-President Peter read his report which incorporated other councillors' reports that had been submitted.

His report included a suggestion that the new Council elected each year should be active by April instead of in May as at present. 4PJ said that he could see no virtue in the gap existing between the end of the W.I.A. year in February and the start of Council activity.

The report said that in the year, the QSL section had worked so smoothly that one hardly knew it existed. Despite advices, many Amateurs did not claim QSL cards and they had to be returned to the sender. During the year, a total of 3,540 cards were sent at an average cost of two-thirds of a penny, but there are about 4,500 cards on hand ready to send.

Membership at the end of the year should show four life members, 202 full members, and 88 associates, making a total of 302, a net increase of 17. The proportion of licensed operators in Queensland to licensed W.I.A. members was unsatisfactory.

The meeting also had reports from 4KB (Trustees), 4AO (Federal Convention), and 4EF (Disposals).

The ballot for this year's Council resulted in the following members being elected: 4PJ, 4JF, 4ZBZ, 4KB, 4DG, 4AW, 4CI, 4WX, 4VM, 4SA, 4LT and 4ZZ.

The order of business was interrupted to allow the ordinary monthly meeting to be held, and the annual meeting was closed at 10.55 p.m.

The Division Convention at Alexandra Headland on April 14 and 15 was quite a show, and we hope you can read about it in a separate story submitted for this edition of "A.R."

The April Council meeting held at the QTH of Peter 4PJ decided to ask the VK2 Division that a frequency other than 7105 Kc. be used during an emergency. This was one frequency used when a net operated in the Northern Rivers area early in April. The frequency is the Intrastate hook-up frequency for VK4.

The v.h.f. boys who took part in the Senior Scout Easter venture communications set-up deserve a special pat on the back for the good job they did. A letter of thanks from the venture leader says that this year's communications were the best ever. The venture received press and radio publicity, and mention was made of the W.I.A. We hope more will accept the invitation by the Boy Scouts to do a similar job of service at next year's venture. Also, Senior Scouts aged between 15 and 18 are an excellent source for future members.

The boys up at Ipswich also deserve praise this month for the effort that they would have put into an Amateur display at their annual four-day Show on May 9, 10, 11 and 12. At the time of writing, Merv 4MW, Maurie 4AU, Henry 4HC and Ralph 4ZCH were going to set up their gear at the showground in a project helped by Rotary. Special QSL cards were to be sent to all Amateurs contacting the showgrounds.

Alf 4OL, who is at present running 4WI on Sundays, has had the Geloso tx running and no doubt many members have heard this equipment on the air on 7 and 14 Mc. Good reports have been received from as far away as Townsville. Alf can now also transmit on 6 mx but not with the three together as he's still trying to get around the problem of how to hold three mikes in two hands. He's making an attempt to solve it using only one mike and some gadget.

Alf is one of a number of h.f. fans in the Brisbane area who are learning their two and three times multiplication tables again. They are rock hunting for crystals to put them up (or is it down!) with the v.h.f. boys. Among the others who have been chanting that three times 8.4 is 25.2, and that twice that is 50.4, are George 4GG, Bill 4WS and Les 4EH. The Oscar II. project has had several soldering irons hot and if it's in orbit by now there should be reports of its passage above VK4.

In closing, we will predict that this month's "A.R." will be the most widely read for years. Why? Didn't you notice last month that 5 PanSy (frustrated with the Post Office and fees?) has decided to put down his acid pen, unfortunately not for ever, but for a month while he toddles hither and yon around the country side on his hols. Wonderful news like that spreads around the place from VK0 to VK9 like wildfire, the best possible circulation booster. 73, Don.

ALLOCATION OF CHANNEL 0

The announcement by the P.M.G. (Mr. Davidson) on May 8 that the allocation of television Channel 0 for Melbourne and Brisbane is confirmed, deserves the strongest protest ever made by W.I.A. members. The decision means that Amateurs in these cities have to give up operating the 50 Mc. band, another band snatched from under the noses of the Amateur fraternity. Channel 0 covers from 45 to 52 Mc., leaving only 2 Mc. free, and Amateurs are asking how they can possibly operate from as low as eight to 10 watts against 100 kw. from a t.v. station on an adjacent frequency. The VK4 boys are already up in arms and intent on making their views known. Here is the chance for the W.I.A. to show what a strong voice it has.

BUNDABERG CLUB

At the monthly meeting on April 9, club members were feted to a film evening which was greatly appreciated and enjoyed by all. These film evenings are becoinmg a feature of the club and students and licensed members alike are finding them very enlightening and of great interest.

The club vice-president (Les 4XJ), who chaired the meeting in the absence of president Frank 4UK, conveyed the club's congratulations to Mrs. Joscelyn McGrath on obtaining her full Amateur licence. Joscelyn is the XYL of our secretary-treasurer (Rusty 4JM), often heard these days on the 40 mx band.

One of our members, Roy KV, has just installed a maritime mobile in his new boat, and members are looking for calls. Les 4XJ contacted the club's first Morse instructor, Alan 8AD, ex-4AD. Alan now resides in Darwin and his ex-pupils were delighted to know he is back on the air, and will be looking around for him. 73, 4MZ.

CAIRNS

Six mx activity still the mainstay for the last month with a few openings to JA land. Bill 4ZWG worked a few but I can only claim half a contact. A JA3 answered my CQ but that damn rx of mine distorts on weak signals after it has been running for an hour and I couldn't copy the JA3. Rick will have to look to his laurels as he can no longer claim the distinction of being the only Ham in Cairns to work any DX on 6. Very pleased to hear that the VK9 boys are tuning up as high as 50.7 Mc. to see if they can hear us, but we so far have not heard a sign. Keep trying please VK9.

Hear that Harry 4HK is paying a visit to the big smoke. Did hear Claude 4UX making a date to meet Harry at the railway station at 11 o'clock at night and that Harry would recognise as the fine, upstanding athletic gentleman with the mop of unruly hair with a large flask under his arm. Knowing Claude as I do, Harry you'd better watch out for what he has got in that flask. Don't spill it on your clothes for goodness sake, for he brews it himself.

Over the Easter holidays I visited Innisfail, spending most of the day eating Bob 4TK out of house and home and yarning about Ham Radio. I don't like going to Bob's place though for his shack is so tidy and my XYL insists that mine has got to be cleaned up after she gets an eyeful of that studio!

Apparently a few of the northern boys went bush over the Easter. Ross 4RO calling me from a place called, of all things, Paradise Bay. Wonder what sort of a place that is? There is a place called Paradise in Adelaide, but we don't say much more about that place, no fear.

Answering a knock on the front door, found Tim 2ZTM on the doorstep. He signed the visitor's book as mobile, but with the amount of gear he had in that vehicle, he should have signed 2WI portable. I never knew it was possible to get so much gear in the front seat and still find a place to sit and drive. What he had in the back was nobody's business. Ask about beams to go fox hunting and he would dive into the pile of gear and exhibit a beaut three element beam which he claims is just the berries. After a night, last saw him asking directions for Townsville on his way home.

Frank 4FC blew in from Ingham during the Easter break and it was good to see him after being so near, yet only knowing each other's voice. Tried very hard to convert him to 6, but he seems to be stuck on this 144 Mc. band. 73, 4ZW.

SOUTH COAST

For me, most of April has been spent travelling leisurely to VK4 Convention at Alexandra Headland, returning home, and then to the VK2 Northern Zone Convention at Urunga. At Alexandra Headland, the South Coast had five representatives, Neal 4WW, Cres 4ZAO, R. Kyle, Southport Amateur Radio Club President (Ken 4ZGX) and self—four Wandering Southport.

Neal and Cres ran second in one of the hidden tx hunts. On the whole, a splendid time was had by all, and according to the grapevine, the location was f.b.

Two reps. from VK4, George 4GG and myself, were present at Urunga. A very comprehensive programme was arranged and everybody was kept on the go from the Friday night till the Monday, and for those staying on, a programme to suit their wishes was available. All told, another successful and enjoyable "do".

Recognition of the work done by Amateurs and their potential in civil defence has been voiced by the local press, and attention drawn to the availability of instruction in the art at the Southport Radio Club which is now holding classes on Saturday afternoons.

Of note in passing, Frank 2ACQ, the supervisor of VK2 slow Morse sessions and liaison officer for country members, on his way north to the Sunshine State to sample our golden beaches and the hospitality for which Queensland is noted. 73, 4WS.

TOWNSVILLE DISTRICT

Just received a QSL card from VK6 land depicting an invitation to the Empire Games; very nice indeed, when compared with the drab card issued to the VK4 boys by the Tourist Bureau. The boys from the Burdekin Club journeyed to Paradise Bay for the Easter weekend and pleasant time was had by all. Claude 4UX took the Scouts out camping and tells almost unbelievable tales of the cooking he was given and swears the tea was boiled furiously all day. Congrats. to 4OJ and XYL on arrival of 4th daughter; keep trying Joe, the law of averages must come good.

4GS still undecided and cannot make up his mind which is the best hobby—Amateur Radio, hot rodding, or chasing the opposite sex! Ellis 4ZEA in the big smoke and looking over all the latest equipment. John 4DK toying with the idea of getting commercial gear and making a comeback, has very little time for building which is his pride and joy.

The Burdekin Club enrolled two new members, making a total of 26. T'ville Club will have to look to its laurels if they still increase. While 16 are attending the current A.O.C.P. classes, whacko the future QRM!

A visit was paid to the district by VR4CB and sorry to have missed him. Graham 4BX sold his gear, including beam and tower, and now whiles away the idle moments with a new car—XK140. Frank 4PF speculated in real estate with view to shifting to new QTH. Don't forget Frank, the shack to be built first. Charlie 4BQ still an old stalwart in the Kookaburra session each morning. John 4DD and Eric 4EL still working the G boys on s.s.b. and c.w. While Bert 4LB, who is on holidays, worked five new countries in a row on s.s.b. the other night, UA0 on Wrangel Is., PZ1, HH2, KP6, and YV5. (I am jealous of the one on Wrangel Is.) Bill 4ZBE still has an opening to JA land.

Very sorry to hear that Alice, XYL of Claude 4ZY, is on the seriously ill list, hope she is soon well again. Harry 4HK is going south to the big smoke on a business-cum-holiday trip, and wondering what new gear he can manage to bring back. Basil 4ZW hopes to have another candidate for the next exam. and promises the usual cuppa when I arrive at end of the month.

The last two Sundays the 4WI broadcast on 14 Mc. has been 5/9 but no hook up except Bob 4RW, Frank 4ZM and Rick 4VR, who natter amongst themselves, hoping others will join in like old times. What about it boys, call in and let me hear you and what is happening in your shack and district. The writer hereby pledges to let you hear the new rig on s.s.b. before the next new moon. Congrats. to all the councillors who won the selection to serve the 4WI. Hope you all pull together and make things go with a swing. Too long we have had no cohesion and remember we have the best Sunshine State, so let us also have the best WI to safeguard our interests. 73, 4RW.

SOUTH AUSTRALIA

ELIZABETH AMATEUR RADIO CLUB

At the April meeting of the club almost the entire evening was taken up with a discussion on members' complaints about the W.I.A. This brought forward several suggestions and resulted in a letter being drafted and forwarded to the S.A. Division, with a copy to the Federal Executive. 5FY, our worthy president, was absent Interstate and 5PE took the chair. 5NQ was elected as the club's representative on the W.I.A. Divisional Council.

Congrats. to 5PE and Sheila on the birth of a daughter; only Australian in the family so far. Congrats. also to Clive on being elected to the Divisional Council of the W.I.A. In addition to his work with the local Fire Brigade, this lad has also found time to give technical instruction to some of the chaps preparing for the A.O.C.P. exam; one of whom, Trevor Mell, has already passed his limited exam. More congratulations!

A new call heard in Elizabeth is 5CR, Layton Catford, son of 5XL. Layton is rather limited for antenna space, but has been heard with a good signal from his 807. He uses a CR100 rx.

John 5QL is away from home quite often in the course of his work, but is busily working to get himself going in a big way with an s.s.b. rig under construction. In the meantime his signal with a QRP rig is surprisingly strong.

5FY still plugging away on c.w., mainly on 20 mx. Takes a keen interest in the progress of 5NO's new house, because he's taking over the beam when Tubby moves out of Elizabeth.

All the boys are waiting anxiously for the Field Day results—bit too much to expect to win it three times in a row, but we seem to have come pretty close.

5TM heard on again after recently shifting to Elizabeth Downs. 5QX puts in an appearance now and then from the Woomera Club. 5EJ, 5CV and 5AG are often heard on 20 c.w., working the DX. 5NQ won the Australian section of the 1961 All Asia Contest; has now attained membership of that august body, the Certificate Hunters' Club, and has also been elected president of the University of Adelaide Radio Club, which club (5UA) has now become affiliated with us, presumably to take advantage of our QSL Bureau. 5ZMK and 5ZBR are still very active on the v.h.f. bands.

True Story. One of our more intrepid Elizabethans probed so deeply into the Interior recently that he came upon the hidden City of Adelaide. Whilst gazing wide-eyed at the many marvels, he suddenly grasped his wife's arm and said, "Look, there's Pansy Parsons, let me introduce you to him." Said she, in her quaint Elizabethan accent, "Not likely choom, we saw Dave King on Tuesday; one comedian a week's enoof!"

5IK running 150w. to a three element beam on fifteen and already piling up a DX score on both phone and c.w. 5DS was able to distribute a large quantity of used valves at a recent club meeting. These were very gratefully received and most members took away their share. 5ZDV has not been heard yet with his new call of 5WV, but has now got his crystal converter to the preliminary try-out stage and is very pleased with results. We learn from unreliable sources that 5ZC spends most of his time on 40 mx phone. 5DY has built himself a filter type s.s.b. rig and is getting out remarkably, using a 4X150A linear and a ground plane.

Our s.w.l. members, Peter and Roger, are getting more than their share of inward DX cards. Jim Mackessen is busy studying for his ticket. 5ZMA has repaired a small Hallicrafters rx, recently presented to the club. As soon as a 240/110v. transformer becomes available, this rx will be available for club use, or for short term loan to members. Nothing has been heard recently of 5HA or 5KD.

Hugo 5ZDA has now passed his full ticket and will shortly be on the DX bands. 5RC has been heard on sideband with his HT37, but he is another one having trouble to find space for a good antenna. 5NO will probably be closing down soon for a long time, because of shifting to a new QTH in Gawler. 73, 5NO.

LOW NOISE XTAL CONVS. 144 Mc.
Repairs to and construction of Receivers, Transmitters and Test Equipment.
T.V. alignment.
ECCLESTON ELECTRONICS
146a Cotham Road, Kew, Vic. WY 3777

TASMANIA

Election for Council offices were held during April, and the following appointments were made: President, Tom 7AL; Vice-Presidents, Len 7LE and Snowy 7CH; Secretary, Ken 7KA; Treasurer, Snowy 7CH; Bulletin Editors, Ken 7KA and Snowy 7CH; Bulletin Distribution Committee, Tom 7AL and Terry 7CT; Bulletin Technical Editor, Alan 7MY. Council feels, as a result of the Bulletin arrangements, that the work will be much more equitably spread and that the overworked Secretary might have a little time to come on the air. We hope to hear you there too Ken.

Ted 7EJ, our Federal Councillor, has just returned from the Federal Convention in Perth where he represented us through 40 hours of discussion and policy making. We were delighted that so much of our contribution met with success and our thanks are due to Ted for representing us so ably.

My apologies to Ken 7AI for not knowing he was on s.s.b. since 1958; blame skip please Ken. While on the subject of s.s.b., George 7XL has been heard putting out a beautiful s.s.b. signal and Ted 7EJ will soon be heard on 80 mx s.s.b. 7CK will not be heard on the air for some months from now, because Poley has left for an overseas tour, taking in apparently all points east and west from VK7. Look out for Poley from overseas stations. I was delighted to work a G on 7 Mc. early in April on c.w. of course.

We were privileged to be addressed by Professor Ellis, of the University, at our May Divisional meeting on the subject of Radio Astronomy. This address was another science in action lecture, as he described present experiments in this field under way in Tasmania. His delight at the prospect of holes in the ionosphere during the next couple of years augurs bad for DX operation on our bands. Many good questions were asked of the Professor from the keenly interested audience. The April Divisional meeting was very interested in a transistorised grid dip oscillator presented by Brian 7ZBE. 73, 7ZZ.

NORTHERN ZONE

Northern Zone members "went bush" on the night of Friday, 13th, however let us hasten to add that the only reason was to attend the April meeting of the zone which, on this occasion, was being held at the home of our President, John Forster, 7JF, at Poatinna. In spite of a 66-mile round trip the meeting was one of the best attended meetings held by the zone for a long time. Sixteen members arrived and I have since heard that the Forster family had the alternative of going to bed or sitting on the floor for the evening. (As the meeting concluded round about midnight, they probably ended up doing both anyway.)

This was the first meeting of the year under the control of our new office-bearers and both our new President and Secretary impressed all those attending by their efficiency and by the amount of work that they have already put into projects and plans for the welfare of the zone whilst under their control. Lecture for the evening was the playing of a tape recording by Ed Tilton, W1HDQ, on v.h.f. and this was one of the best and most informative lectures ever heard by the zone.

The following day 20 members of the W.I.A. and I.R.E. were shown over the Poatinna Hydro-Electric project by 7JF, the highlight of the tour being a visit into the giant underground power station now in course of construction. This entailed a half mile trip by diesel bus which ended up in the huge excavation 300 feet long, 50 feet wide, 90 feet high and 500 feet underground, which will eventually house generators delivering 360 mw's.—that m.w. doesn't stand for mill-volts either!

Interstate visitor to the zone this month was Morton 3ANG. 7PF has now been advised by W6SAI that he is VK7 co-ordinator for Project Oscar and if members are requiring information on this project, they should look for Peter on 7 Mc. 73, 7LZ.

NORTH WEST ZONE

During the month had the pleasure of a visit by Morton 3ANG for a day and we were fortunate to be able to tag along with the Northern Zone boys on an inspection tour of the new hydro-power project at Poatinna. We are grateful to John 7JF in his role of guide. I believe Morton is convinced that we don't do things by halves in VK7.

Have an uncomfortable feeling that 7MS has succumbed to the t.v. bacteria. Have not heard him around and it looks as though another of my QRM problems is solved. How long can I resist this dreadful thing? With the opening of Northern Channel 9, pandemonium will break forth and we will be playing a losing battle. Even if you are in the rake-off chaps, don't forget the Institute altogether.

Heard someone calling 7ZW on 20 mx. Did not know that you were on DX Athol; good show. I was fortunate to be in Harold's (7MZ) final QSO from this zone. Has now migrated to Southern Zone. Reg 7RL was working portable from Cradle Mountain the other day. I could not hear you Reg, but hope that you made some contacts.

Have just returned from the social meeting of the zone. About 12 members were present and it does not grieve me much to say that those who did not appear missed a very fine film evening; t.v. again I suppose. Felt very proud of Harry, who, when questioned, said, "I am having a night off t.v." A lot of strange terms and jargon were heard from a corner of the room emanating from 7AI and 7XL, discussing respective s.s.b. rigs. Who will be next? Sid did a fine job with some films, 100 per cent. all talking. There's now't that fellow cannot do. The display of colour slides was greatly enhanced by Ron, a visitor from ZL. Must go to ZL.

Well having given t.v., the greatest enemy of this organisation, my usual hate session, I will now wish you all good viewing, plenty of breakdowns, and hope to have more next month. 73, 7MX.

HAMADS

Minimum 5/-, for thirty words.
Extra words, 2d. each.

Advertisements under this heading will only be accepted from Institute Members who desire to dispose of equipment which is their own personal property. **Copy** must be received at **P.O. Box 36, East Melbourne, C.2, Vic., by 8th of the month,** and **remittance should accompany** the advertisement. Call signs are now permitted in Hamads. Dealers' advertisements **not accepted** in this column.

CLEANING Out: Small power supply units, 240v. a.c. input, 250v./50 mA. out, 6.3v., £1 each. Some Meters, 0-10 to 0-200 mA., round, 10/- to 30/- each. Power Transformers, 10/- each, some ex 122 Sets. Command V.f.o., dismantled, 3-4.5 Mc., complete and with spares, £1/10/-. Two Walkie-Talkie Units, need small repairs, £1 each. One 12-18v. input Genemotor, and filtered supply unit, 300v/100 mA. output, £2. Vibrator Unit, 6v. to 100v./30 mA., 10/-. Class C Wavemeter, complete with power supply. Philips Communications Receiver, perfect order, £17/10/-. All the above in good order. Please add postage. VK4SS, 35 Whynot St., West End, Brisbane. Phone 4-6526.

FOR SALE: Gear ex late VK5MD. Type 3 Mk. II., complete with modulator, £35. Class C Wavemeter, £7/10/-. Apache Heathkit Xmtr (TX1), 110v., £140, in excellent order. Hammarlund HQ145 Rcvr., 110v., £140, in excellent order. Power Transformer, 240/110v., £8. Or reasonable offers will be considered. C. H. Baseby, VK5BZ, 12 Seafield Ave., Kingswood, S.A. Ph. 7-4161.

FOR SALE: Power Transformers—400v. aside, 250 mA., £3; 1,400v. aside, 400 mA., £6. Chokes—10H., 400 mA., £2; 10H., 250 mA., £1. Condensers—4 μF., 2,000v., 10/-. Meter, 1 mA. f.s.d., 6½" diam., £2. VK3AIW, L. Weller, 46 Pepperel Ave., Syndal, Vic.

S.S.B.: Sell KWM1 Transceiver, showroom condition. 23 Surrey Road, Keswick, S.A.

WANTED: 3 to 6 Mc. Command Receiver, good condition (adapted or original condition), suitable for s.w.l. for crystal controlled converters. Craig Cook, 10 Foch St., Ormond, Vic. Phone 58-1773.

CRYSTALS ALL THESE FREQUENCIES £2 EACH

3.5 Mc. Ham Band:

DC	3515	FT	3555
FT	3535	DC	3560
FT	3536	DC	3562
DC	3537	FT	3564
FT	3534	FT	3573
DC	3547	FT	3575
FT	3549	FT	3580
FT	3552	FT	3587
DC	3552	FT	3595

7 Mc. Ham Band:

Crystals of any frequency, £2.

50 Mc. Hand Band:

DC	8333.3	=	50 Mc.
DC	8383.3	=	50.3 Mc.
DC	8400	=	50.4 Mc.
DC	8416	=	50.5 Mc.
DC	8450	=	50.7 Mc.
DC	8483	=	50.9 Mc.
DC	8500	=	51 Mc.

144 Mc. Ham Band:

DC	8000	DC	8014
DC	8010	DC	8014.5
DC	8013	DC	8015
DC	8013.5	DC	8015.5

144 Mc. Ham Band (continued):

DC	8016	DC	8022.5	DC	8029.5
DC	8016.5	DC	8023	DC	8030
DC	8017	DC	8023.5	DC	8030.5
DC	8017.5	DC	8024	DC	8031
DC	8018	DC	8024.5	DC	8031.5
DC	8018.5	DC	8025	DC	8032
DC	8019	DC	8025.5	DC	8032.5
DC	8019.5	DC	8026	DC	8033
DC	8020	DC	8026.5	DC	8033.5
DC	8020.5	DC	8027	DC	8034
DC	8021	DC	8027.5	DC	8034.5
DC	8021.5	DC	8028	DC	8035
DC	8022	DC	8028.5	DC	8035.5
		DC	8029		

CONDENSERS

Superseal Paper Type:

0.0047 μF. 400v. 0.001 μF. 1000v.

ALL 6d. EACH

Metalpak Electrolytic Type:

25 μF. 25v.d.c.w. 2 μF. 150v.d.c.w.
2 μF. 200v.d.c.w. 2 μF. 250v.d.c.w.
and others.

ALL 6d. EACH

Electrolytic Chassis Mounting:

24 μF., 350 peak volts .... **2/- each**
32 μF., 200 volts working .... **2/- each**
25 μF., 40 peak volts .. .. **2/- each**

Mica Condensers:

15 pF.	68 pF.	270 pF.
20 pF.	70 pF.	300 pF.
25 pF.	100 pF.	500 pF.
47 pF.	220 pF.	750 pF.
50 pF.	250 pF.	1000 pF.

ALL 9d. EACH

Metalpak Pig-Tail:

0.022 μF. Sprague .. .. **1/- each**
0.0022 μF. Sprague .... **1/- each**

VALVE SOCKETS

Ceramic 4-pin Valve Sockets, **2/- each**
,, 5-pin ,, ,, **2/- each**
,, 6-pin ,, ,, **2/- each**
,, 7-pin ,, ,, **2/- each**
7-pin Miniature Valve Sockets and Shields. New. **15 for £1.**
9-pin Valve Sockets, McMurdo, **9d. ea.**
Octal Valve Sockets .... **1/6 each**

CO-AXIAL CABLE

100 ohm co-ax. cable, ⅜" diam., **2/- yd.**
98 ohm co-ax. cable, ⅜" diam., in 100 yard rolls **£5**, or **1/3 yard.**
Twinex co-ax cable, 75 ohm .. **2/- yard**
72 ohm, 3/16" diam., **2/- yard**, or 100 yard roll £8/15/0.
50 ohm co-ax. cable, ⅜" diam., **2/- yard** or in 100 yd. rolls **£8/15/0.**

We have stocks of the latest—
LOG BOOKS 5/6

CERAMIC SWITCHES

Two-Pole, Six-Position **15/-**

COMMAND P.A. COILS

For 3-4 Mc. Tx. (Serial No. 7247).
Price 7/6 each

COMMAND INDUCTORS

Single layer coil (Serial No. 6035).
For 5.3-7 Mc. and 7-9.1 Mc. Tx.
Price 7/6 each.

SAKURA CIRCUIT TESTER

Model TR-6S

Sensitivity: d.c. 20,000 ohms/volt, a.c. 10,000 ohms/volt. Ranges—d.c. volts: 6, 30, 120, 600, 1,200v.; a.c. volts: 6, 30, 120, 600, 1,200v. D.c. current: 60 μA., 6 mA., 60 mA., 600 mA. Resistance: 10K, 100K, 1M, 10M ohms. Capacitance: 0.001-0.2 μF., 0.0001-0.01 μF. Inductance: 30 3,000H. Decibels: —20 to +17 db. (0 db.—0.775v.—600 ohms). Dimensions: 4⅛" x 6¼" x 2⅜". Weight: 1.3 lbs.
Price £9/10/0 inc. tax.

FERROCART VACUUM TUBE VOLTMETER

V.T.V.M. .. .. **£19/17/6** inc. tax
H.V. Probe .. .. **£3/5/0** inc tax
R.F. Probe .. .. **£2/10/0** inc. tax

ECKO NO. 88 TRANSCEIVER

Portable, xtal locked 4 channel, 40 to 43 Mc., 14 valves, 1L4, 1T4, 3A4, etc., 12v. 3a. input power supply. Less crystals, mike and headphones, etc.
To Clear, £6/10/0 each

RECORDING TAPE

TMK "Syncrotape" 7" Rolls, PL-12 (Standard) **£1/16/6**
TMK "Syncrotape" 7" Rolls AC-18 (Long Play) **£2/10/6**

V.H.F. RECEIVERS

Type R89/ARN-5A. 300 Mc. Valves: seven 6AJ5s, two 12SN7s, one 12SR7, one 28D7, six relays, and three crystals of 6522.9 Kc. As new. **£5 each.**

MULTIMETER Model 200H

20,000 ohms per v. d.c. 10,000 ohms per v. a.c.

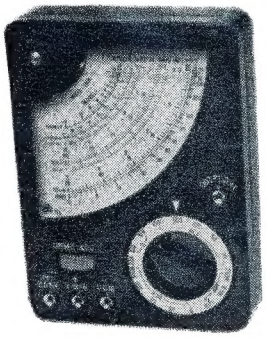

Specifications:
D.c. volts: 0-5, 25, 50, 250, 500, 2,500.
A.c. volts: 0-10, 50, 100, 500, 1,000.
D.c. current: 0-50 μA.; 25, 250 mA.
Resistance: 0-60K ohms; 0-6 meg.
Capacity: 0.01-0.3 μF. (at a.c. 5v.); 0.0001 - 0.01 μF. (at a.c. 250v.).
Decibel: minus 20 db. plus 22 db.
Output range 0-10, 50, 100, 500, and 1,000.
Battery used: UM3 1.5v. 1 piece.
Dimensions: 3¼ x 4½ x 1-1/8 in.

Complete with internal battery, testing leads and prods.
Price £5/17/6 inc. tax.

Spare Probes for 200H .... **5/- pair**
Spare Probes for PT34 .... **4/6 pair**

COMMAND TRANSMITTERS

3-4 Mc. range **£7**
7-9 Mc. ,, ... **£6**

SPECIALS!! SPECIALS!!

Egg Insulators, 1½" x 1" .... **9d. each**
300 ohm **T.V. Ribbon** .. .. **1/- yard**
Three-Core Domestic **Cable** .. **2/3 yard**
Hook-up Wire, 10/010, red, black, and green .... **4d. yard**, 30/- 100 yd. roll
AT5/AR8 A.W.A. Instruction Manual, circuits and installation **30/-**
Earphone Inserts, actuating diaphram type, ideal as small speaker **7/6**
40 mA. Dial Globes .... **1/- each**
Pye double bulkhead mounting **Chassis Co-ax Connectors** **2/6**
Pye **Co-ax Connectors** .... **4/- pair**
English **Co-ax Connectors**, plug and socket, suit ⅜" cable, **4/- pair.** Right angles **4/- each.**
Crystal Sockets, DC11 .... **2/6**
Crystal Sockets, FT243 & miniature **2/9**
Jack Boxes, SCR522 type, contains 10K pot and knob. Size 3¾ x 1½ x 2, **3/6**
AR8 Cables, 10 ft. long, 8-pin plugs attached **10/-**
High Impedance **Headphones**, **12/6 pr.**
SCR522 28v. **Genemotor** power supply, **20/-**. 5/- packing fee.
English **Filter Chokes**, 40 mA., 100 ohm resistance .... **3/6 each**
Carbon Microphones .... **12/6 each**
Carbon Mike Transformers, small, new, ... **5/- each**
Vibrators, Oak/M.S.P. 6v. synchronous 7-pin AV5211R .... **£1 each**
Octal Plug and Socket, American Amphenol, in metal screw case, **8/6 set**
"Scope" Soldering Iron, to clear, 45/-; complete with transformer, £4/10/0.

8 Mc. MINIATURE CRYSTALS

Band-edge market Miniature Crystal and socket, **£2.**

HAM RADIO SUPPLIERS

5A MELVILLE STREET, HAWTHORN, VICTORIA Phone 86-6465

Money Orders and Postal Notes payable Nth. Hawthorn P.O. 5/- Packing Charge

TWENTY NOW REPLACED BY THREE

3 Super Radiotron picture tubes now replace 20 popular types

(Over 80% of total tube replacements)

By stocking Super Radiotron, TV repair servicemen gain the following benefits:

Minimum overhead; storage space savings; ease of ordering; lower depreciation; smaller losses in case of fire or theft.

	SUPER RADIOTRON TYPE 17CGP4 REPLACES 9 POPULAR TYPES	
17BP4	17HP4	AW 43-20
17BP4B	17HP4B	MW 43-60
17CGP4	A43-64	MW 43-69
	SUPER RADIOTRON TYPE 21CBP4A REPLACES 7 POPULAR TYPES	
21ALP4	21ALP4B	AW 53-80
21ALP4A	21ATP4	MW 53-80
	21CBP4A	
	SUPER RADIOTRON TYPE 23MP4 REPLACES 4 POPULAR TYPES	
23MP4	23WP4	AW 59-90
	AW 59-30	

For additional information concerning these and other Super Radiotron types consult the new picture tube interchangeability wall chart, publication No. TV-3. This AWV chart contains characteristics and replacements for 57 tube types common to the Australian market.

AMALGAMATED WIRELESS VALVE CO. PTY. LTD. • Sydney • Melbourne • Brisbane